OMICRON

CPX 200

User Manual



Manual version: ENU 1246 05 02

© OMICRON electronics GmbH 2025. All rights reserved.

This manual is a publication of OMICRON. All rights including translation reserved. Reproduction of any kind, for example, photocopying, microfilming, optical character recognition and/or storage in electronic data processing systems, requires the explicit consent of OMICRON. Reprinting, wholly or in part, is not permitted.

The product information, specifications, and technical data embodied in this manual represent the technical status at the time of writing and are subject to change without prior notice.

We have done our best to ensure that the information given in this manual is useful, accurate, up-to-date, and reliable. However, OMICRON does not assume responsibility for any inaccuracies which may be present.

The user is responsible for every application that makes use of an OMICRON product.

OMICRON translates this manual from the source language English into a number of other languages. Any translation of this manual is done for local requirements, and in the event of a dispute between the English and a non-English version, the English version of this manual shall govern.

Table of contents

1 Introduction ... 10
1.1 About this document ... 10
1.2 Symbols and conventions ... 10
1.3 Fulfilled directives ... 11
1.4 Recycling ... 12

2 Safety ... 13
2.1 Basic safety information ... 13
2.2 Designated use ... 13
2.3 Operator qualifications ... 13
2.4 Safety rules ... 14
2.5 Safety instructions ... 14
2.5.1 Work environment ... 14
2.5.2 Personal safety ... 15
2.5.3 Mechanical safety ... 15
2.5.4 Operating the measurement setup ... 15
2.6 Grounding ... 16
2.7 Power supply ... 16
2.8 Handling long cables ... 17
2.9 Static charges ... 17

3 CPX 200 ... 18
3.1 CPX 200 hardware configuration ... 18
3.2 CPX 200 front panel ... 18
3.2.1 CPX 200 safety functions and components ... 20
3.2.1.1 SAFE and ACTIVE signal lights ... 20
3.2.1.2 Emergency switching off button ... 21
3.2.1.3 INTERLOCK key ... 21
3.2.1.4 Operational mode button ... 21
3.2.1.5 Discharge warning indicator light ... 22
3.2.1.6 SAFETY LINK ... 23
3.2.2 Indicator lights ... 23
3.2.3 Power button ... 25
3.2.4 Ambient light sensor ... 26
3.2.5 Beeper ... 26
3.3 CPX 200 right side panel ... 27
3.4 CPX 200 left side panel with (optional) High Current Module ... 29
3.4.1 Handling the 1 000 A AC/DC High Current Module cables ... 30
3.4.2 Dust filter ... 32

4 HVX10 ... 33
4.1 HVX10 right side panel ... 34
4.2 HVX10 left side panel ... 35
4.2.1 HVX10 safety functions and components ... 36
4.2.1.1 Safety and interlock functions ... 36
4.2.1.2 SAFE and ACTIVE signal lights ... 36
4.3 Connecting the HVX10 to the CPX 200 ... 37
4.4 Transportation of the CPX 200 and the HVX10 ... 39
4.4.1 Separating the CPX 200 and the HVX10 ... 39
4.4.2 Safe transportation ... 41
4.4.3 Transport case ... 42

5 Software Installation ... 43
5.1 Downloading CPXpert ... 43
5.2 Installing CPXpert ... 43
5.3 CPX firmware update via CPXpert ... 44

6 CPXpert ... 46

6.1 Home view ... 46
6.1.1 Asset tiles ... 47
6.1.2 File operation ... 48
6.1.2.1 Opening files ... 48
6.1.2.2 Recent documents ... 48
6.1.3 Connect/Disconnect tile ... 49
6.1.3.1 Connecting to the CPX 200 ... 49
6.1.3.2 Manually connecting to the CPX 200 ... 50
6.1.4 OMICRON Continuity ... 51
6.1.5 Title bar ... 52
6.1.5.1 Settings ... 52
6.1.5.2 Help ... 53
6.2 Testing document ... 54
6.2.1 Home ... 55
6.2.2 File menu ... 55
6.2.2.1 New ... 55
6.2.2.2 Open ... 55
6.2.2.3 Save ... 56
6.2.2.4 Save as ... 56
6.2.3 Overview ... 56
6.2.3.1 Test list ... 56
6.2.3.2 Environmental conditions ... 57
6.2.3.3 Work order ... 57
6.2.3.4 Summary ... 57
6.2.4 Report ... 57
6.2.4.1 Requirements for report generation ... 57
6.2.4.2 Report customization ... 57
6.2.5 Nameplate and location ... 58
6.2.6 Live bar ... 58
6.2.6.1 Starting a measurement ... 59
6.2.6.2 Output control ... 60
6.2.6.3 Protective earth ... 61
6.2.6.4 Temperature ... 61
6.2.7 Adding tests ... 61
6.2.8 Changing the test order ... 62
6.3 Assessment rules ... 62
6.4 Auto-recovery ... 63
6.5 Multiple CPXpert instances ... 64
6.6 System requirements ... 64

7 CPX 200 TouchControl ... 65

7.1 Available tests ... 66
7.2 File handling ... 67
7.3 Sidebar ... 68
7.3.1 Test list functions ... 68
7.3.2 Edit asset ... 69
7.4 Status indicators ... 70
7.5 TouchControl settings ... 71
7.5.1 General ... 72
7.5.2 Legal ... 72
7.5.3 Version ... 73
7.5.4 Time and date ... 73
7.5.5 Connection ... 73
7.5.6 Logging ... 74
7.5.7 Device Discovery ... 75
7.5.8 Device Web Interface ... 75
7.6 Testing with TouchControl ... 75
7.6.1 Test views ... 75
7.6.1.1 Starting a measurement ... 76

7.6.1.2 Measurement control ... 77
7.6.1.3 Test settings view ... 78
7.6.1.4 Measurement view ... 79
7.6.1.5 Plot view ... 80
7.6.2 Actual measurement ... 80
7.7 CPX 200 web interface ... 81
7.7.1 Firmware update ... 81
7.7.2 License update ... 81
7.7.3 Other functions ... 82

8 CORTEX Grid ... 83

9 Wiring and operation ... 84
9.1 Safety information ... 84
9.1.1 Connecting/disconnecting test leads ... 84
9.2 Basic steps to carry out a test with the CPX 200 ... 85
9.2.1 Test setup ... 85
9.2.2 Connecting and preparing for signal output ... 85
9.2.3 Changing the wiring ... 87
9.2.4 Disconnecting and switching off ... 88
9.3 Cleaning ... 88

10 Asset data ... 89
10.1 Power transformer ... 89
10.1.1 Transformer – General ... 89
10.1.2 Tap Changer ... 91
10.1.3 Windings ... 92
10.1.4 Terminals/Bushings ... 93
10.1.5 Short-circuit Impedances ... 94
10.2 Current transformer ... 94
10.2.1 Conventional current transformer ... 95
10.2.1.1 Three-Phase Current Transformer ... 96
10.2.1.2 Core ... 96
10.2.1.3 Main taps and Inter taps ... 97
10.2.2 Low-power current transformer (LPCT) ... 97
10.3 Voltage transformer ... 99
10.3.1 Voltage Transformer – General ... 99
10.3.2 Windings ... 100
10.4 Switchgear ... 101
10.4.1 Switchgear – General ... 101
10.4.2 Operating mechanism ... 102
10.5 Location information ... 102

11 Universal tests ... 104
11.1 Quick ... 104
11.1.1 Outputs ... 104
11.1.1.1 Dual output utilization ... 105
11.1.1.2 Temperature monitoring ... 106
11.1.2 Inputs ... 106
11.1.2.1 Frequency-selective measurement ... 108
11.1.3 Trigger settings ... 109
11.1.3.1 Binary trigger settings ... 110
11.1.4 Calculation options ... 111
11.2 C/Tan Delta ... 113
11.2.1 Theory ... 114
11.2.2 Test setup ... 115
11.2.3 Settings and conditions ... 116
11.2.3.1 Measurement modes ... 116
11.2.3.2 Sweeps ... 118
11.2.3.3 Noise suppression / Avoid test frequency ... 120
11.2.3.4 Quick frequency change ... 120

11.2.3.5 Test conditions ... 120
11.2.3.6 Correction factors ... 121
11.2.4 Measurement data ... 122
11.3 Insulation Resistance ... 123
11.3.1 Testing information ... 123
11.3.1.1 Power transformer ... 124
11.3.2 Settings and conditions ... 125
11.3.3 Measurement data ... 126
11.3.4 Testing recommendation ... 127
12 Current Transformer ... 128
12.1 CT Ratio ... 128
12.1.1 Test setup ... 129
12.1.2 Settings and conditions ... 131
12.1.3 Measurement data ... 133
12.1.4 Testing recommendation ... 134
12.2 CT Winding Resistance ... 135
12.2.1 Test setup ... 136
12.2.2 Settings and conditions ... 137
12.2.3 Measurement data ... 138
12.2.4 Testing recommendations ... 139
12.3 CT Excitation ... 140
12.3.1 Test setup ... 141
12.3.2 Settings and conditions ... 142
12.3.3 Measurement data ... 143
12.3.4 Testing recommendation ... 143
12.4 CT Burden ... 144
12.4.1 Test setup ... 144
12.4.2 Settings and conditions ... 145
12.4.3 Measurement data ... 146
12.5 CT Ratio (V) ... 147
12.5.1 Test setup ... 147
12.5.2 Settings and conditions ... 149
12.5.3 Measurement data ... 150
12.5.4 Testing recommendation ... 151
12.5.5 Measurement on bushing type current transformers ... 151
12.5.5.1 Measurement on a Y (wye) winding of the transformer ... 152
12.5.5.2 Measurement on a Δ (delta) winding of the transformer ... 153
12.6 CT Polarity Check ... 157
12.6.1 Test setup ... 159
12.6.2 Settings and conditions ... 160
12.6.3 Measurement data ... 161
12.6.4 Testing recommendation ... 161
12.7 LPCT Ratio ... 162
12.7.1 Test setup ... 162
12.7.2 Settings and conditions ... 165
12.7.3 Measurement data ... 166
13 Voltage Transformer ... 167
13.1 VT Ratio ... 167
13.1.1 Test setup ... 169
13.1.2 Settings and conditions ... 170
13.1.3 Measurement data ... 170
13.2 VT Burden ... 171
13.2.1 Test setup ... 172
13.2.2 Settings and conditions ... 172
13.2.3 Measurement data ... 173
13.3 VT Polarity Check ... 174
13.3.1 Test setup ... 176
13.3.2 Setttings and conditions ... 177

13.3.3 Measurement data ... 178
14 Power Transformer ... 179
14.1 TR Winding DF/PF & C ... 179
14.1.1 Test setup ... 181
14.1.1.1 Two-winding transformer ... 182
14.1.1.2 Three-winding transformer ... 184
14.1.2 Settings and conditions ... 186
14.1.3 Measurement data ... 188
14.1.4 Testing recommendation ... 189
14.2 TR Bushing DF/PF & C1 ... 190
14.2.1 Test setup ... 191
14.2.2 Settings and conditions ... 193
14.2.3 Measurement data ... 197
14.2.4 Testing recommendation ... 197
14.3 TR Bushing DF/PF & C2 ... 198
14.3.1 Test setup ... 199
14.3.2 Settings and conditions ... 200
14.3.3 Measurement data ... 202
14.3.4 Testing recommendation ... 202
14.4 TR Ratio ... 203
14.4.1 Test setup ... 203
14.4.2 Settings and conditions ... 205
14.4.3 Measurement data ... 206
14.4.4 Testing recommendations ... 207
14.4.5 Single-phase ratio measurement wiring ... 208
14.5 TR Winding Resistance ... 214
14.5.1 Test setup ... 214
14.5.2 Settings and conditions ... 215
14.5.3 Measurement data ... 219
14.5.4 Testing recommendations ... 220
14.6 TR Demagnetization ... 221
14.6.1 Test setup ... 222
14.6.2 Settings and conditions ... 222
14.6.3 Measurement data ... 223
14.6.4 Demagnetization principle ... 224
14.7 TR Short-Circuit Impedance/Leakage Reactance ... 225
14.7.1 Test setup ... 226
14.7.2 Settings and conditions ... 227
14.7.3 Measurement data ... 228
15 Switchgear ... 230
15.1 SG Timing ... 230
15.1.1 Test setup ... 230
15.1.2 Settings and condition ... 232
15.1.2.1 Sequence ... 232
15.1.2.2 Coil supply ... 232
15.1.3 Measurement data ... 233
15.1.3.1 Main contacts ... 233
15.1.3.2 Auxiliary contacts ... 235
15.1.3.3 Coil analysis ... 235
15.1.3.4 Motor analysis ... 236
15.2 SG Static Contact Resistance ... 237
15.2.1 Test setup ... 237
15.2.2 Settings and conditions ... 239
15.2.3 Measurement data ... 240
15.2.4 Testing recommendation ... 240
16 Cybersecurity ... 241
16.1 File protection ... 241
16.2 Firewall configuration ... 241

16.3 CPX 200 in a network ... 243
17 OMICRON Device Link ... 244
17.1 OMICRON File Browser ... 244
18 Maintenance ... 246
18.1 Cleaning ... 246
18.2 Replacing the dust filter ... 246
18.3 Changing fuses for I IN1 and I IN2 ... 247
18.4 Device self-test ... 248
19 Open-source license information ... 249
20 Technical data ... 252
20.1 General ... 252
20.1.1 Specification conditions ... 252
20.1.2 Characteristics of AC measurements ... 252
20.1.3 Phase measurement ... 253
20.1.4 Output time ... 253
20.1.5 Calculation example ... 253
20.1.5.1 Temperature outside specification condition ... 253
20.1.6 Environmental conditions ... 254
20.1.7 Standards conformity ... 254
20.2 CPX 200 ... 255
20.2.1 Power supply ... 255
20.2.2 OUT A ... 256
20.2.2.1 Typical output specifications ... 256
20.2.2.2 Guaranteed accuracy ... 257
20.2.2.3 Typical accuracy ... 258
20.2.3 OUT B ... 259
20.2.3.1 Typical output specifications ... 259
20.2.3.2 Guaranteed accuracy ... 259
20.2.3.3 Typical accuracy ... 260
20.2.4 V IN ... 261
20.2.4.1 Guaranteed Accuracy ... 261
20.2.4.2 Typical Accuracy ... 261
20.2.5 I IN ... 262
20.2.5.1 Guaranteed accuracy ... 262
20.2.5.2 Typical accuracy ... 262
20.2.6 BIN OUT ... 263
20.2.6.1 Guaranteed accuracy ... 263
20.2.6.2 Typical accuracy ... 263
20.2.7 BIN IN ... 264
20.2.7.1 Binary input mode (contact configuration: wet) ... 264
20.2.7.2 Binary input mode (contact configuration: dry) ... 264
20.2.7.3 Analog input mode ... 265
20.2.7.4 Guaranteed accuracy ... 265
20.2.7.5 Typical accuracy ... 265
20.2.8 Booster output ... 265
20.2.9 Communication interfaces ... 266
20.2.9.1 Ethernet port ... 266
20.2.9.2 EtherCAT® ports ... 266
20.2.9.3 USB ports ... 266
20.2.9.4 IEC 61850 SFP ports ... 267
20.2.9.5 SAFETY LINK port ... 267
20.2.10 Touchscreen ... 267
20.2.11 Electrical insulation groups ... 268
20.2.12 Mechanical data ... 268
20.3 High Current Module ... 268
20.3.1 HC OUT (1000 A) ... 268
20.3.1.1 Typical output specifications ... 269

20.3.1.2 Guaranteed accuracy ... 270
20.3.1.3 Typical accuracy ... 270
20.3.2 HC OUT (100 A) ... 271
20.3.2.1 Typical output specifications ... 271
20.3.2.2 Guaranteed accuracy ... 271
20.3.2.3 Typical accuracy ... 271
20.4 HVX10 ... 272
20.4.1 HV OUT ... 272
20.4.1.1 Guaranteed accuracy ... 272
20.4.1.2 Typical accuracy ... 274
20.4.2 V IN ... 274
20.4.3 I IN ... 274
20.4.3.1 Guaranteed accuracy ... 275
20.4.3.2 Typical accuracy ... 275
20.4.4 Mechanical data ... 275
20.5 Combined specifications ... 276
20.5.1 Current transformer ratio ... 276
20.5.2 Voltage transformer ratio ... 276
20.5.3 Transformer turns ratio ... 277
20.5.4 Resistance ... 277
20.5.5 Insulation resistance ... 278
20.5.6 Capacitance and Dissipation-/Power factor ... 278
20.5.6.1 Capacitance Cp (equivalent parallel circuit) ... 278
20.5.6.2 Dissipation Factor DF (tan δ) ... 279
20.5.6.3 Power Factor PF (cos φ) ... 279
Support ... 280

1 Introduction

1.1 About this document

This document provides information on how to use this product safely, properly and efficiently.

It contains important safety rules for working with this product and gets you familiar with operating this product. Following the instructions in this document will help you to prevent danger, repair costs, and avoid possible down time due to incorrect operation.

This document is to be supplemented by existing national safety standards for accident prevention and environmental protection.

1.2 Symbols and conventions

The following symbols indicate safety instructions for avoiding hazards:

⚠ DANGER

Death or severe injury will follow if the appropriate safety instructions are not observed.

⚠ WARNING

Death or severe injury may occur if the appropriate safety instructions are not observed.

⚠ CAUTION

Minor or moderate injury may occur if the appropriate safety instructions are not observed.

NOTICE

Equipment damage or loss of data possible



Cybersecurity warning

The following symbols and formatting styles are used:

Symbol/format	Description
✔	Conditions to be met before starting a task
▶	Instructions that can be carried out in any order
1. 2.	Instructions that have to be carried out in the given order 1. Step 2. Step 2.1 Substep 2.2 Substep
➔ / ➔	Expected outcome of a step/task
Text in bold	Text shown on a device, its display or in a software
Text in italics	OMICRON product name
/ **Note:**	Additional information, explanations or tips

1.3 Fulfilled directives

In the following statement, the device is designated as "product", "equipment", or "apparatus".

The OMICRON contact address can be found on the last page (back page) of this document.

European Union

The equipment adheres to the guidelines of the council of the European Community for meeting the requirements of the member states regarding the following directives:

- Electromagnetic compatibility (EMC) directive
- Low voltage directive (LVD)
- RoHS directive

United Kingdom

The equipment adheres to the regulations of the UK government for meeting the requirements regarding the following regulations:

- Electromagnetic Compatibility (EMC) Regulation
- Electrical Equipment Regulation (Safety)
- Regulation for Restriction of the Use of Certain Hazardous Substances in Electrical and Electronic Equipment

USA (FCC)

This equipment has been tested and found to comply with the limits for a Class A digital device, pursuant to part 15 of the FCC Rules. These limits are designed to provide reasonable protection against harmful interference when the equipment is operated in a commercial environment. This equipment generates, uses, and can radiate radio frequency energy and, if not installed and used in accordance with the instruction manual, may cause harmful interference to radio communications. Operation of this equipment in a residential area is likely to cause harmful interference in which case the user will be required to correct the interference at his own expense.

Changes or modifications not expressly approved by the party responsible for compliance could void the user's authority to operate the equipment. If this equipment does cause harmful interference to radio or television reception, contact OMICRON Support (→ Support (page 280)).

Canada

This Class A digital apparatus complies with Canadian ICES-003.

Cet appareil numérique de la classe A est conforme à la norme NMB-003 du Canada.

The use of shielded LAN cables is required when connecting this equipment to any optional peripheral or host devices. Failure to do so may violate FCC and ICES rules, and the EMC directive.

1.4 Recycling

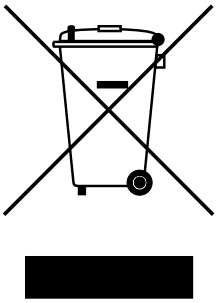

This device (including all accessories) is not intended for household use. At the end of its service life, do not dispose of the device with household waste.

EU countries (incl. European Economic Area)

OMICRON devices are subject to the EU Waste Electrical and Electronic Equipment Directive (WEEE directive). As part of our legal obligations under this legislation, OMICRON offers to take back the device and to ensure that it is disposed of by authorized recycling agents.

Outside the European Economic Area

For information on the environmental regulations relevant to your country, contact the responsible authorities. Dispose of the OMICRON device only in accordance with your local legal requirements.

2 Safety

2.1 Basic safety information

- ▶ Before operating the device, make sure that you have read this document and fully understood all instructions.
- ▶ Only install and operate the device and any accessories according to the instructions in the corresponding user documentation.
- ▶ Make sure that this document is available on the site where the device is operated, either digitally or in print.
- ▶ Contact OMICRON Support (→ Support (page 280)) if you do not understand any of the instructions in this document.

Using the device must comply with all applicable local and national safety standards, regulations and safety-relevant documents.

Improper use may result in damage to persons or property and could invalidate warranty claims.

2.2 Designated use

The *CPX 200*, in conjunction with its accessories or as a stand-alone unit, is a multi-purpose primary test set for commissioning and maintaining substation equipment. It can be used to perform tests on current transformers (CT), voltage transformers (VT), power transformers (TR) and switchgear (SG) as described in Available tests (page 66).

The various, partly automated tests are defined and parameterized via a color multi-touch display on the front panel of the *CPX 200* or a PC connected to the *CPX 200* using *CPXpert*.

The optional accessory *HVX10* is a high-precision system component for on-site insulation tests of high-voltage assets such as power transformers and bushings as well as the tests described in Available tests (page 66). It works as an add-on device to the *CPX 200*, which is used to control the measurement. The *HVX10* can also be used as high-voltage source.

- ▶ Do not use the *CPX 200* to test batteries. This could result in damage to the *CPX 200*, battery explosions, fires or chemical leakage.

2.3 Operator qualifications

Only authorized and qualified personnel who are regularly trained in electrical engineering and their specific tasks are permitted to install and operate the device and any accessories.

All personnel installing or operating the equipment must be familiar with the equipment and observe all applicable standards, local regulations, and safety-relevant documents, for example, the following standards or their equivalents:

- EN 50191 (VDE 0104) "Erection and Operation of Electrical Test Equipment"
- EN 50110-1 (VDE 0105 Part 100) "Operation of Electrical Installations"
- IEEE 510 "IEEE Recommended Practices for Safety in High-Voltage and High-Power Testing"

Personnel receiving training, instructions, directions, or education on the device must be under constant supervision of an experienced operator while working with the equipment.

- ▶ Before starting to work, clearly establish the responsibilities:
  - Designated person in control of the electrical installation
  - Designated person in control of the work activities
- ▶ Make sure that the designated person in control of the work activities coordinates the communication with all persons involved in work activities.

2.4 Safety rules

Always observe the five safety rules:

1. Disconnect completely.
2. Secure against re-connection.
3. Verify that the installation is dead.
4. Carry out grounding and short-circuiting.
5. Provide protection against adjacent live parts.

2.5 Safety instructions

- ▶ Stay focused on your tasks to ensure safety.
- ▶ Visually check the device for damage. If the device or any accessory is damaged, not in technically sound condition, or does not seem to function properly, do not use it. If in doubt, contact OMICRON Support (→ Support (page 280)).
- ▶ In case of unforeseen or erroneous behavior of the device during use, immediately stop using the device. When removing any wiring, adhere to the five safety rules.
- ▶ Only use original cables provided by OMICRON.
- ▶ Only use original accessories provided by OMICRON.
- ▶ Make sure that the test object is isolated from other sources during testing.

Using cables and accessories not provided by OMICRON is at your own risk. Make sure they meet all technical requirements and comply with the relevant safety and certification standards. If in doubt, contact OMICRON Support (→ Support (page 280)).

OMICRON offers a range of accessories for added safety during the operation of our test systems. For further information and specifications, contact OMICRON Support (→ Support (page 280)).

2.5.1 Work environment

- ▶ The device is designed for indoor and outdoor use. Only use the device on dry, solid ground.
- ▶ Do not operate the device in a condensing environment.
- ▶ Do not operate the device in the presence of explosive or flammable gas, vapors, or dusts.
- ▶ Do not operate the device under environmental conditions that exceed the temperature and humidity limits listed in the "Technical data" section.

- Before using any additional equipment, make sure that the environmental conditions are suitable for that equipment.
- Make sure that the device and all accessories are dry and clean. In dusty regions, use protective cable caps.

2.5.2 Personal safety

- Protect others from accessing the danger zone and accidentally touching live parts by setting up a suitable safety barrier and, if applicable, signal lamps.
- Warn other people prior to any operation to make them aware of any possible disturbances.
- If you have a cardiac pacemaker, do not use the device. If you have another type of electronic medical implant consult a medical professional before operating the device. Make sure there is no person with an electronic medical implant such as a cardiac pacemaker in the immediate vicinity.
- Leave the danger zone before performing a test with the device. Stay in the work area during the test.

2.5.3 Mechanical safety

- Do not insert objects into any of the device's openings.
- Do not cover the device and make sure any ventilation openings remain unobstructed.
- Ensure that all safety-relevant components such as signal lights and emergency switching off buttons are always visible and accessible.
- Test leads wired to tall test objects must be sufficiently mechanically secured. Be aware of the hazard of falling adapters or cables.
- Do not open the device without authorization.
- Do not modify or repair the device.
- Contact OMICRON Support (→ Support (page 280)) for maintenance and repair.

2.5.4 Operating the measurement setup

- Before handling the *CPX 200* or *HVX10* in any way, connect its equipotential ground terminal with a solid connection of at least 6 mm^2 cross-section to the ground terminal of the test object.
- Never connect or disconnect a test object while the outputs are active.
- Do not remove any cables from the *CPX 200* or *HVX10* during a test.
- When connecting cables to a control cabinet, be aware of uninsulated live components. Adhere to the safety instructions provided by the manufacturer.
- Make sure that a test object's terminals that are to be connected to the *CPX 200* or *HVX10* do not carry any voltage potential. During a test, the only power source for a test object may be the *CPX 200*.
- Make sure the use of the *CPX 200* or *HVX10* is in accordance with the regulations on site and the designated use described in this document (→ Designated use (page 13)).
- Comply with the workflow described in this document. Avoid interruptions or distractions that could affect safety.
- Do not enter the danger zone if the red **ACTIVE** (red) signal light or the **Discharge** indicator light of the *CPX 200* are continuously lit or flashing since all outputs can carry dangerous voltage or current!

- ▶ Before entering the danger zone, remove the **INTERLOCK** key from the *CPX 200* and wait until the external loads are discharged and the outputs are locked. This state is reached when the green **SAFE** (green) signal light is lit continuously.
- ▶ Always obey the five safety rules and follow the detailed safety instructions in the respective user manuals.
- ▶ Do not connect the measurement setup to assets, if there is a possibility of a thunderstorm or lightning. Cancel the measurements at the slightest indication of lightning.

2.6 Grounding

- ▶ Only operate the *CPX 200* with a power supply connected to protective earth (PE).
- ▶ Make sure that both the PE connection of the power supply and the ground connector of the *CPX 200* have a solid and low-impedance connection to the grounding system on site. This also applies to all other test sets and accessories in the test setup.
- ▶ Make sure that the grounding clamp has a good electrical contact to the grounding system on site and avoid connecting it to corroded or painted surfaces.
- ▶ Make sure that the grounding terminal connections of all grounded devices in use remain intact during the whole measurement procedure, and are not accidentally disconnected.
- ▶ Only use grounding and supply cables provided by OMICRON.

2.7 Power supply

Operating the *CPX 200* without PE and ground connection is dangerous and not permitted.

- ▶ Only operate the *CPX 200* with a power supply connected to protective earth (PE).
- ▶ If the power cord is unexpectedly disconnected from the power supply socket during normal operation of the *CPX 200*, the *CPX 200*'s power supply socket must not be touched for a minimum of 5 seconds. This is to mitigate risk of electrical shock from components of the *CPX 200* that may still be charged.

Power supply from grounded grids (TN/TT)

Before a measurement is started, the *CPX 200* automatically verifies the PE connection in grounded grids (TN/TT).

- ▶ If this check fails, check the power cord and power supply.

If the error message persists, there is no intact connection to protective earth (PE).
This is dangerous. In this case, measurements are not permitted and cannot be performed.

Power supply from isolated grids (IT) - generator use

An IT grid is a grid structure where none of the active conductors are galvanically connected to ground. In an IT grid, only the PE is connected to ground.

In IT grids, the check fails – even if there is a PE connection. This can be the case when the *CPX 200* is powered by a generator. Since every operation mandates a PE connection for the operation of the *CPX 200*, you need to manually verify this.

If the *CPX 200* is supplied by a generator, the equipotential ground or PE of the generator has to be grounded properly.

- ▶ If this is not possible, measurements are not permitted and cannot be performed.

Additional information

Instead of supplying the *CPX 200* from phase-neutral (L1-N, A-N), it may also be supplied from phase-phase (for example, L1-L2; A-B).

- ▶ Make sure that the voltage does not exceed 240 V_{AC}.
- ▶ Make sure that the power supply is fuse-protected (16 A automatic circuit breaker).
- ▶ Do not use an extension cable on a cable reel to prevent an overheating of the cord; run out the extension cord.
- ▶ Keep extension cables as short as possible to prevent power loss.

If the power supply is < 190 V_{AC}, the *CPX 200* cannot provide the full output power.

- ▶ Therefore, in order to gain the full output power, provide a sufficient power supply (190 V … 240 V_{AC}).

2.8 Handling long cables

- ▶ The entire working environment, including the power supply of the test system, must not extend beyond the perimeter of the substation, except where this is not feasible due to the situation on site.
- ▶ Make sure the *CPX 200*, its cables, and the test object are properly grounded as described in this manual.
- ▶ Before unreeling any power extension cords to supply the *CPX 200*, make sure the respective cable is connected to a power supply with protective earth (PE).
- ▶ Before unreeling any measurement, communication or interface cables of the *CPX 200*, make sure no cables are connected to an ungrounded test object.
- ▶ Extra care should be taken that cables are placed as close as possible to ground level (this practice minimizes both electric and magnetic coupling).
- ▶ Any measurement, communication or interface cables of the *CPX 200* shall be placed in an environment where unauthorized or unintentional human entry is avoided during usage of the *CPX 200* by any means necessary.
- ▶ Unwind extension cables from their reel. Otherwise they will overheat.

2.9 Static charges

Static charges on bushings or other apparatus such as transformer windings may be induced by test potentials. While the voltage may not be significant enough to do any damage, it can be a source for serious accidents due to falls caused by reflex action.

High static charges may also be encountered at the bushing capacitance taps if the covers are removed.

- ▶ Ground all test objects before handling.

3 CPX 200

This section gives an overview of the functional elements of the *CPX 200*.

3.1 CPX 200 hardware configuration

The *CPX 200* is available in the following 2 hardware configurations:

- *CPX 200* without **High Current Module**
- *CPX 200* with **High Current Module**

The **High Current Module** adds 2 new outputs to the *CPX 200*:

- 1× 1000 A AC and DC output
- 1× 100 A DC output

NOTICE

Equipment damage possible

- ▶ The **High Current Module** shall only be installed or de-installed by OMICRON, or by service centers certified by OMICRON for this specific purpose. Any installation or de-installation performed by unauthorized personnel will immediately void all warranties and guarantees associated with the product.
- ▶ Utilizing the **High Current Module** within supported tests necessitates the continued presence of the relevant test licenses for the *CPX 200*.

3.2 CPX 200 front panel

The *CPX 200* front panel is ergonomically designed to facilitate easy access and operation of its various input and output functions.

The following safety functions are located at the top of the panel:

- **INTERLOCK** key: to protect against unauthorized and unintended activation of the *CPX 200*.
- **Operational mode button**: to switch between the **ACTIVE** and **SAFE** modes of the device. Measurements can only be initiated in the **ACTIVE** mode.
- **Grounding** socket: to provide a defined voltage potential for the *CPX 200*.
- **Emergency switching off button**: to rapidly stop all measurements in emergency situations. When pressed during operation, the *CPX 200* and connected system components such as the *HVX10* will immediately suspend any output signaling.

  While there is active energy flow within the wiring setup, the *CPX 200* may attempt to discharge the energy within the system, depending on the utilized output.

  Note: During active discharge, the operational mode will remain set to **ACTIVE** and will not indicate a **SAFE** state, even while the emergency switching off button is pressed.

The following components are located on the right-hand side of the front panel:

- **Jog-dial wheel**: to manually adjust output parameters in supported *CPX 200 TouchControl* tests such as **Quick**.
- **Power button**: to turn the *CPX 200* on or off.

▶ To switch on the system, initiate the start-up sequence by a single press.

▶ To switch off the system, either press the button once more to trigger a shutdown prompt, or hold the button for 5 seconds to force a shutdown.

Central to the front panel is a colored touchscreen display, serving as the primary interface for users testing with the *CPX 200 TouchControl* software.

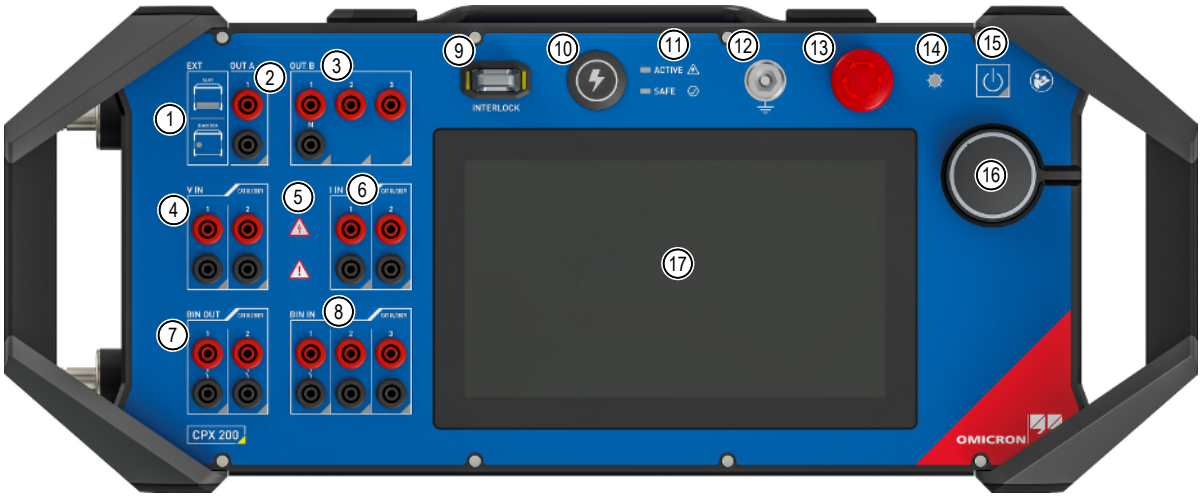

Figure 3-1: Functional elements on the *CPX 200*'s front panel

No.	Element	No.	Element
1	Indicator lights	10	Operational mode button
2	**OUT A** (4 mm sockets) Convertible AC/DC current and voltage output	11	Red **ACTIVE** and green **SAFE** signal lights
3	**OUT B** (4 mm sockets) AC/DC single-phase and true three-phase voltage output	12	Grounding socket
4	**V IN** (4 mm sockets) 2 × AC/DC 300 V inputs	13	Emergency switching off button
5	Warning indicator lights	14	Ambient light sensor
6	**I IN** (4 mm sockets) 2 × AC/DC 10 A inputs	15	Power button
7	**BIN OUT** (4 mm sockets) 2 × binary outputs with integrated current measurement	16	Jog-dial wheel for controlling the *CPX 200*
8	**BIN IN** (4 mm sockets) 3 × multipurpose binary inputs with integrated 300 V AC/DC voltage inputs	17	Multi-touch color display for controlling the *CPX 200*
9	**INTERLOCK** key		

⚠ CAUTION

Minor or moderate injury caused by hot surfaces possible

If **OUT A** outputs currents > 30 A for prolonged times, the cables and plugs in use could get hot.

3.2.1 CPX 200 safety functions and components

The *CPX 200* has built-in safety functions which simplify the wiring procedure and increase user safety. In addition, these functions facilitate compliance with DIN EN 50191 (“Erection and operation of electrical test equipment”).

3.2.1.1 SAFE and ACTIVE signal lights

The **SAFE** and **ACTIVE** signal lights indicate the safety-relevant operational status of the *CPX 200*.

- When the *CPX 200* is in the **SAFE** mode, the green signal light indicates that the device is safe for wiring. In the **SAFE** mode, all energies stored in the *CPX 200* are discharged and the outputs are safe to touch.
- When the *CPX 200* is in the **ACTIVE** mode, the red signal light indicates a possible danger before or during testing.

⚠ WARNING

Death or severe injury caused by high voltage or current possible

A steady red **ACTIVE** signal light signifies that the *CPX 200* is prepared to inject via the configured output(s).

▶ Make sure that no person is inside the danger zone before activating a measurement via the **START** button.

▶ Wiring and re-wiring is not allowed while the device is in **ACTIVE** mode.

⚠ WARNING

Death or severe injury caused by high voltage or current possible

A flashing red **ACTIVE** signal light indicates that a measurement is currently in progress.

▶ Before performing any wiring or re-wiring on the *CPX 200* or the measurement setup, make sure that the measurement is stopped.

▶ Make sure no person enters the danger zone during this time.

Table 3-1: Statuses of the **ACTIVE** and **SAFE** signal lights

Indicator	Signal light status	Action
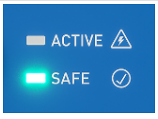	**SAFE** signal light is continuously illuminated in green	The operational mode is inactive or set to **SAFE** state.

Indicator	Signal light status	Action
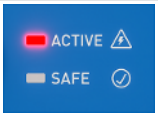	**ACTIVE** signal light is continuously illuminated in red	The operational mode is set to **ACTIVE** state, but no measurement is currently in progress.
	**ACTIVE** signal light is continuously flashing in red	The operational mode is set to the **ACTIVE** state, and a measurement is currently ongoing.
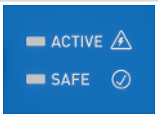	**ACTIVE** and **SAFE** signal lights are off, while the *CPX 200* is running.	**Dangerous operating condition** Always consider this a dangerous device state. It is forbidden to use the *CPX 200* under any circumstances in this state.

3.2.1.2 Emergency switching off button

Pressing the emergency switching off button immediately shuts off all *CPX 200* and *HVX10* outputs and stops the running measurement. The outputs of the *CPX 200* will be short-circuited. When the emergency switching off button is pressed, you cannot start any measurements.

- ▶ Only use the emergency switching off button in an emergency.
- ▶ During regular operation, stop tests via the operational mode button or the software.

⚠ WARNING

Death or severe injury caused by heat generation, explosions, fires or chemical leakage possible

Battery testing is not supported by the *CPX 200*. If the emergency switching off button is pressed while a battery is connected to any output of the *CPX 200*, this will result in a short-circuit on the battery, causing a highly dangerous situation that may lead to heat generation, battery explosions, fires, chemical leakage, or equipment damage.

3.2.1.3 INTERLOCK key



The **INTERLOCK** key is used to prevent unauthorized activation. Removing the **INTERLOCK** key will initiate the change from **ACTIVE** to **SAFE** mode. When multiple people are working on the same test setup, the **INTERLOCK** key is used to prevent unauthorized activation while people are in the danger zone. It is not possible to switch to the **ACTIVE** mode when the **INTERLOCK** key is removed.

3.2.1.4 Operational mode button

The operational mode button is used to change the operational status of the *CPX 200* and the *HVX10* outputs from **SAFE** to **ACTIVE** mode and vice versa:

- Switching from **SAFE** to **ACTIVE** mode as soon as wiring is done to be able to start the test sequence via the control software.
- Switching from **ACTIVE** to **SAFE** mode as soon as the test sequence has been executed to be able to safely change the wiring.

The operational mode button is equipped with a white indicator light. The following statuses are possible:

Status	Description
Off	Pressing the operational mode button has no effect. ▶ Check if the **INTERLOCK** key is missing.
White, continuously on	Operational mode button can be pressed to change the operating state of the *CPX 200*.
White, flashing followed by a pause (repeating pattern)	The **SAFETY LINK** topology does not match. ▶ Check the **SAFETY LINK** topology and confirm it in *OMICRON Device Link*.
White, flashing (5 times)	Pressing the operational mode button has no effect. ▶ Make sure your configuration is correct.

The **Operational Mode** button illuminates when the **INTERLOCK** key is inserted, signifying the device is in operational mode.

Table 3-2: Indicator light statuses of the **Operational Mode** button

Indicator	Signal light status	Actions
	**Operational Mode** button is off.	The **INTERLOCK** key is removed from the *CPX 200*.
	**Operational Mode** button is continuously illuminated in white.	The device is running, and the **INTERLOCK** key is plugged in the *CPX 200*.

3.2.1.5 Discharge warning indicator light

For specific tests, like resistance measurements, the system automatically discharges upon completion of the test. Throughout this discharge process, the discharge warning indicator light will flash red. It is crucial to avoid altering any wiring or entering the designated danger zone while the discharge indicator light continues to flash red.

Table 3-3: Status of the discharge warning indicator light

Indicator	Description	Device state
	Red, flashing	Voltage or current is discharged.

3.2.1.6 SAFETY LINK

The **SAFETY LINK** is a digital communication protocol designed for real-time interaction among all devices in the **SAFETY LINK** topology. It ensures synchronized operation and state awareness across the network.

Access to the **SAFETY LINK** is facilitated via 2 points on the right side of the *CPX 200* unit:

- The **SAFETY LINK** interface, designed for peripherals like the *OSA1* warning lamps.
- 3 **EtherCAT**® ports, dedicated to system components including the *HVX10*.

SAFETY LINK ensures that all devices within the *CPX 200* system maintain synchronization with the **SAFE** and **ACTIVE** states of the system. Any change in state by a component is instantly communicated to all networked elements via the **SAFETY LINK**, whether from **SAFE** to **ACTIVE** or vice versa.

Whenever a device is added or removed, the operator must actively verify and confirm the updated **SAFETY LINK** topology.

3.2.2 Indicator lights

The *CPX 200* and the *HVX10* are equipped with a variety of indicator lights. These indicator lights provide real-time information about the status of the *CPX 200* and the *HVX10*.

Outputs

The output indicator lights provide status updates on the device's output signals. When an output is ready to inject, its corresponding indicator light turns red.

Table 3-4: Indicator light statuses of the outputs

Indicator	Description	Device state
	Off	The output is inactive and not configured.
	Blue, continuously on	The output is configured, and the device is in the **SAFE** mode.
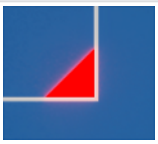	Red, continuously on	• The output is configured, and the device is in the **ACTIVE** mode. • The output is active (voltage or current is discharged).
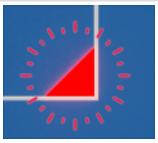	Red, flashing	The output is active and in overload state.

Inputs

The input indicator lights display the status of the device's input signals. A white light signifies that the corresponding input is configured properly in the **ACTIVE** state and is ready to be used during the measurement process

Table 3-5: Indicator light statuses of the inputs

Indicator	Description	Device state
	Off	The input is inactive and not configured.
	Blue, continuously on	The input is configured and the device is in the **SAFE** mode.
	White, continuously on	• The input is configured and the device is in the **ACTIVE** mode. • The input is active during a measurement.
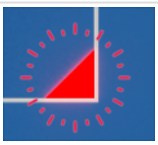	Red, flashing	An unconfigured input is measuring either a voltage greater than 42 V or a current exceeding 3 mA.

Indicator light self-check

The *CPX 200* performs a self-check of the indicator lights of all inputs and outputs during the start-up sequence.

Table 3-6: Indicator light self-check sequence

Indicator	Indicator light status	Self-check status
	Blue, with varying brightness	Blue indicator light check passed.
	Red, with varying brightness	Red indicator light check passed.

Indicator	Indicator light status	Self-check status
	Green, with varying brightness	Green indicator light check passed.
	One or more colors are not displayed, or the indicator lights stay off altogether.	**Dangerous operating condition.** Always consider this a dangerous device state. It is forbidden to use the *CPX 200* under any circumstances in this state.

3.2.3 Power button

The power button is used to turn the device on or off. When the device is powered on, the indicator light turns green, indicating the device is in a healthy condition.

Table 3-7: Indicator light statuses of the power button

Indicator	Description	Device state
	Green, continuously on	The *CPX 200* is ready to use.
	Green, flashing	• The power supply is connected to the *CPX 200*, however, the *CPX 200* is currently not running. • The *CPX 200* is in the process of powering down.
	Yellow, flashing	Under- or overvoltage of the power supply.
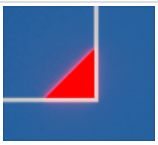	Red, continuously on	**Dangerous operating condition**
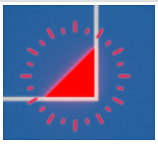	Red, flashing	Always consider this a dangerous device state. It is forbidden to use the *CPX 200* under any circumstances in this state.

Indicator	Description	Device state
	Off	The *CPX 200* is powered off.

3.2.4 Ambient light sensor



The ambient light sensor controls the brightness of the integrated indicator lights and display and adapts them to the current light situation. For example, the display and lights of the *CPX 200* will turn brighter in a bright environment, whereas they will dim down in a dark environment.

▶ To manually adjust the sensitivity of the ambient light sensor, refer to the *CPX 200 TouchControl* **Settings** (→ General (page 72)).

3.2.5 Beeper

Optionally, the beeper can generate an acoustic signal when an output of the *CPX 200* or its accessory devices is active. The beeper can be configured in the *CPX 200 TouchControl* (→ TouchControl settings (page 71)) or *CPXpert* settings (→ Settings (page 52)).

Table 3-8: Beeper modes

Mode	Description
2 short beeps (0.3 s on, 0.7 s off)	Part of the hardware self-check of the *CPX 200* during device start-up. Signals the start sequence before output activation.
3 short beeps (0.3 s on, 0.7 s off)	Indicates the start sequence before *HVX10* **HV OUT** output activation when **Beeper** is set to **Off**.
Intermittent beep (0.3 s on, 0.7 s off)	Occurs intermittently during testing to signal ongoing processes.
1 long beep (1.5 s on)	Indicates the stop sequence at output deactivation.
Disabled	The beeper is disabled. **Note:** Safety awareness is reduced when the beeper is disabled.

⚠ WARNING

Death or severe injury caused by high voltage or current possible

An inaudible beeper does not indicate absence of danger.

▶ Always follow the safety instructions regardless of the beeper configuration (→ Safety (page 13)).

▶ The safety-relevant operational status of the *CPX 200* and its accessories is only indicated by the **ACTIVE** and **SAFE** signal lights.

▶ The absence of 2 acoustic beep signals at the *CPX 200* device start-up indicates a dangerous erroneous state of the device. Do not use the *CPX 200* under any circumstances in this state.

3.3 CPX 200 right side panel

The right-hand side panel offers easy access to communication interfaces and power supply units for both the *CPX 200* and optional system components such as the *HVX10*.



Figure 3-2: *CPX 200* (right) side panel with power supply, **Booster** output and communication connectors

Table 3-9: Functional elements on the *CPX 200*'s (right) side panel

No.	Element	No.	Element
1	**EtherCAT**® ports (3 ×) **EtherCAT**® ports serve as communication interfaces, connecting additional *CPX 200* system components such as the *HVX10*.	5	USB-A 3.0 ports (2 ×) for connecting external storage such as USB sticks for data transfer or USB dongles
2	**IEC 61850** SFP ports (2 ×) **IEC 61850** SFP ports supporting copper and fibre optic network interfaces	6	**SAFETY LINK** interface **SAFETY LINK** interface powers and links additional OMICRON safety equipment such as the *OSA1* warning lamp.
3	Ethernet port The *CPX 200* can be connected to a PC via the Ethernet port.	7	**EXTERNAL BOOSTER** output for powering connected *CPX 200* accessory devices and components.
4	USB-B 3.0 port	8	**Power** supply socket

Power supply plug types

In some situations, the *CPX 200* can draw more power than external circuit breakers allow. To prevent outages or damage to other connected devices, the *CPX 200* emulates a fuse to trip before the external circuit breaker. This is especially relevant for countries with low line voltage.

⚠ CAUTION

Injury due to too high current consumption

At low power supply voltage and certain settings, the *CPX 200* can draw more current than the power outlet can provide.

- Only use the original power cords provided with the *CPX 200*.
- When using a generator to power the *CPX 200* and its accessories, ensure that the supply complies with the *CPX 200* requirements stated in Technical data (page 252).
- If the power supply for the *CPX 200* is insufficient or there is a power loss during operation, the software system of the *CPX 200* may not respond. Follow the five safety rules and ensure that no discharge warning indicator light (→ Discharge warning indicator light (page 22)) on the *CPX 200* or the *HVX10* is flashing before entering the danger zone or performing any rewiring on the *CPX 200*.

3.4 CPX 200 left side panel with (optional) High Current Module

The left side features the ventilation grid with the removable dust filter and the optional **High Current Module**.

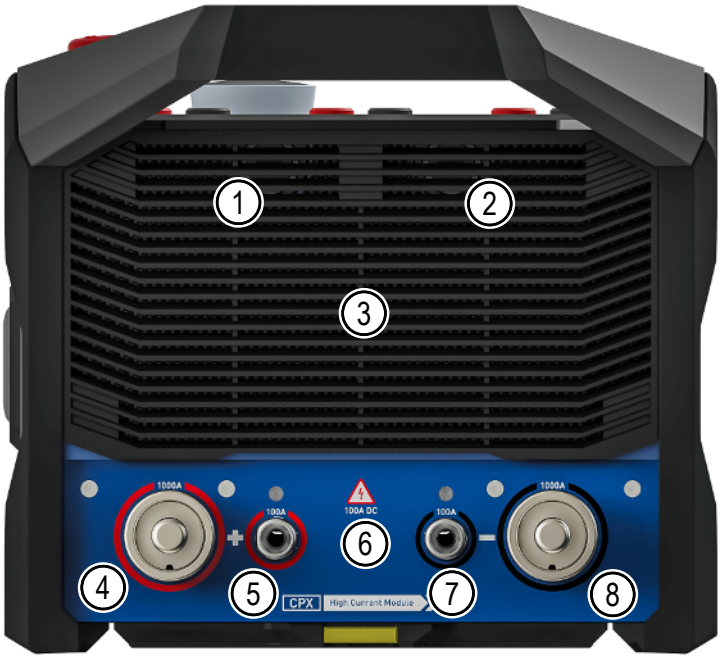

Figure 3-3: *CPX 200* (left) side panel with dust filter and the optional **High Current Module** (bottom part).

No.	Element	No.	Element
1	12 A fuse (behind dust filter)	5	**100 A** DC **+** output
2	12 A fuse (behind dust filter)	6	Warning indicator light
3	Magnetic ventilation grid (dust filter holder)	7	**100 A** DC **-** output
4	**1000 A** AC/DC **+** output	8	**1000 A** AC/DC **-** output

The *CPX 200* expansion slot is designed to accommodate the **High Current Module**. The **High Current Module** equips the *CPX 200* with one 1000 A AC/DC output as well as one 100 A DC output. The 100 A DC output has an active discharge functionality. Once the **High Current Module** is installed, the tests supported by this module and licensed via the *CPX 200* can automatically utilize the enhanced output capabilities of the **High Current Module**.

⚠ DANGER

Death or severe injury caused by high voltage or current

If charged with current, inductive loads may store a dangerous amount of energy.

- Only use the **OUT A** or **HC OUT (100 A)** output to carry out DC tests on inductive test objects to ensure proper discharging of the connected load.
- Never use the **HC OUT (1000 A)** output to carry out DC tests on inductive test objects. The **HC OUT (1000 A)** output does not have an active discharge functionality.

The **High Current Module** is optional. It must be installed by a certified OMICRON Service Center in the expansion slot on the left side of the *CPX 200*.

3.4.1 Handling the 1 000 A AC/DC High Current Module cables

Connecting the 1 000 A AC/DC High Current Module cables

- When utilizing the 1 000 A AC/DC **High Current Module** cables and clamps, ensure that the cables are securely fastened to the clamps and outputs.
  → A clicking sound indicates that the cable is firmly attached to the clamp or output.
- Verify that the 1 000 A AC/DC **High Current Module** cables and clamps/outputs are connected in the tightest possible configuration and cannot be detached by exerting force in opposite directions on the cable and clamp with both hands.

Ensuring that cables and clamps are tightly attached minimizes the risk of accidental damage or injury caused by falling accessories or overheating of the connection points during operation.

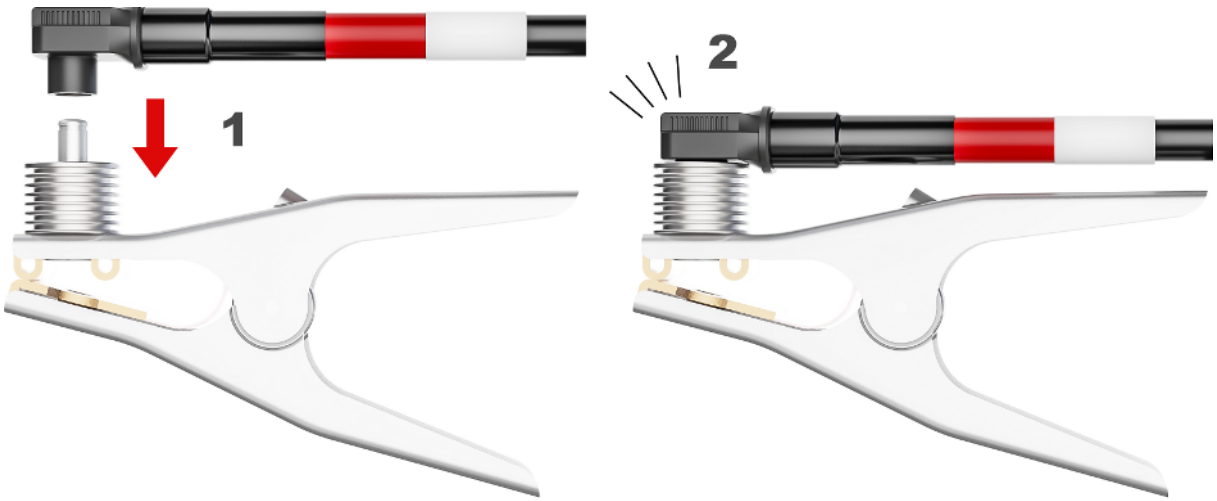

Figure 3-4: Correct connection of the 1 000 A AC/DC **High Current Module** cable and clamp

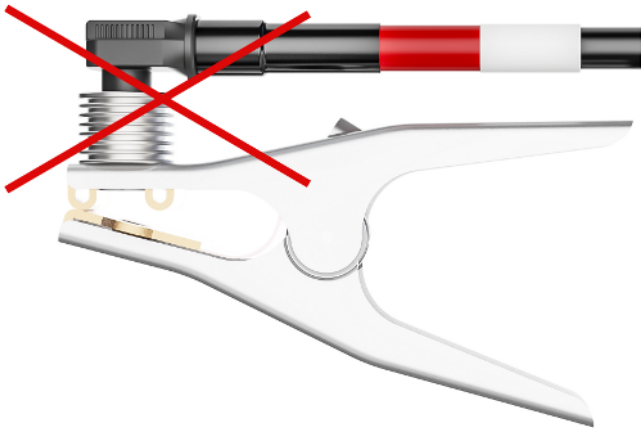

Figure 3-5: Wrong connection of the 1 000 A AC/DC **High Current Module** cable

⚠ CAUTION

Minor or moderate injury caused by hot surfaces possible

During and after operation with the *CPX 200*, the high-current cables and clamps may develop increased surface temperature.

▶ To prevent burns, use gloves when touching cables and clamps during or shortly after operation.

Detaching 1 000 A High Current Module cables

To detach the 1 000 A AC/DC **High Current Module** cables from the unit:

1. Press and hold the red button on the cable.
2. Pull to release the cable.
3. Repeat this step to disconnect the other cables from the high-current clamps.



Figure 3-6: 1 000 A AC/DC **High Current Module** cables in locked state



Figure 3-7: 1 000 A AC/DC **High Current Module** cables in unlocked state

3.4.2 Dust filter

To ensure the optimal performance of your *CPX 200* system, keep the dust filter clean and minimize the amount of dust that enters the system. The accumulation of dust can cause overheating, less airflow, and an increase in power consumption. Regular cleaning helps the system to cool itself effectively, prolonging the lifespan of the components and ensuring that the system operates at ideal performance.

4 HVX10

The *HVX10* is operated in conjunction with the *CPX 200*, providing test voltages of up to 10 kV AC/DC. The *HVX10* hardware and its accessories are required for performing a variety of measurements, including Capacitance & Dissipation/Power factor as well as Insulation Resistance measurements.

NOTICE

Altered measurement results due to mechanical force affecting the *HVX10*'s reference capacitor

The *HVX10* contains a reference capacitor that could be negatively impacted during a fall of the *HVX10* from a height of around 10 cm or more. This could even be the case if no damage to the device is visible externally.

▶ In case of such a fall, we recommend sending the *HVX10* to OMICRON for an accuracy check and calibration.

Utilize the *HVX10* in supported tests. The corresponding test licenses for the *CPX 200* must be kept in place.

4.1 HVX10 right side panel



Figure 4-1: *HVX10* right side panel with **EtherCAT®** connector and Booster input

Functional elements on the *HVX10*'s right side panel

No.	Element	No.	Element
1	**EtherCAT®** port **EtherCAT®** port for connecting the *HVX10* to the *CPX 200*	2	**BOOSTER IN** providing the *HVX10* with power from the *CPX 200*

4.2 HVX10 left side panel



Figure 4-2: *HVX10* left side panel with grounding terminal, measurement inputs and high-voltage output

Functional elements on the *HVX10*'s left side panel

No.	Element	No.	Element
1	**M GND** (measurement ground) socket with interlock function. (→ HVX10 left side panel (page 35))	4	**V IN** measurement input
2	Red **ACTIVE** and green **SAFE** signal lights	5	**I IN** measurement inputs 4× 225 mA AC / 4× 7.5 mA DC current inputs
3	**HV OUT** high-voltage output		

For more details on the interlock function, refer to Safety and interlock functions (page 36).

4.2.1 HVX10 safety functions and components

4.2.1.1 Safety and interlock functions

The *HVX10* has several internal and external safety functions to prevent dangerous situations. The *HVX10* will not work if a safety function detects a problem, such as:

- Defect of the protective ground connection to the control device
- Missing measurement ground connection (cable not connected to device)
- Bad measurement ground connection (measurement ground has no contact to protective ground)
- Disconnection between the high-voltage cable and the *HVX10*

4.2.1.2 SAFE and ACTIVE signal lights

The **SAFE** and **ACTIVE** signal lights indicate the safety-relevant operational status of the *HVX10*.

- The green signal light shows the **SAFE** mode, which indicates that the *HVX10* is safe for wiring. In the **SAFE** mode, all energies stored in the *HVX10* are discharged and the outputs are safe to touch.
- The red signal light shows the **ACTIVE** mode, which indicates a possible danger before or during testing.
- If the **HV OUT** output is active, the **ACTIVE** signal light will start to flash red.

Table 4-1: Statuses of the **ACTIVE** and **SAFE** signal lights

Indicator	Signal light status	Action
	**SAFE** signal light is continuously illuminated in green	The operational mode is inactive or set to SAFE state.
	**ACTIVE** signal light is continuously illuminated in red	The operational mode is set to the ACTIVE state, but no measurement is currently in progress.
	**ACTIVE** signal light is continuously flashing red	The operational mode is set to the ACTIVE state, and a measurement is currently ongoing
	**ACTIVE** and **SAFE** signal lights are off, while the *HVX10* is running.	**Dangerous operating condition** Always consider this a dangerous erroneous state of the device and do not use the *HVX10* under any circumstances.

4.3 Connecting the HVX10 to the CPX 200

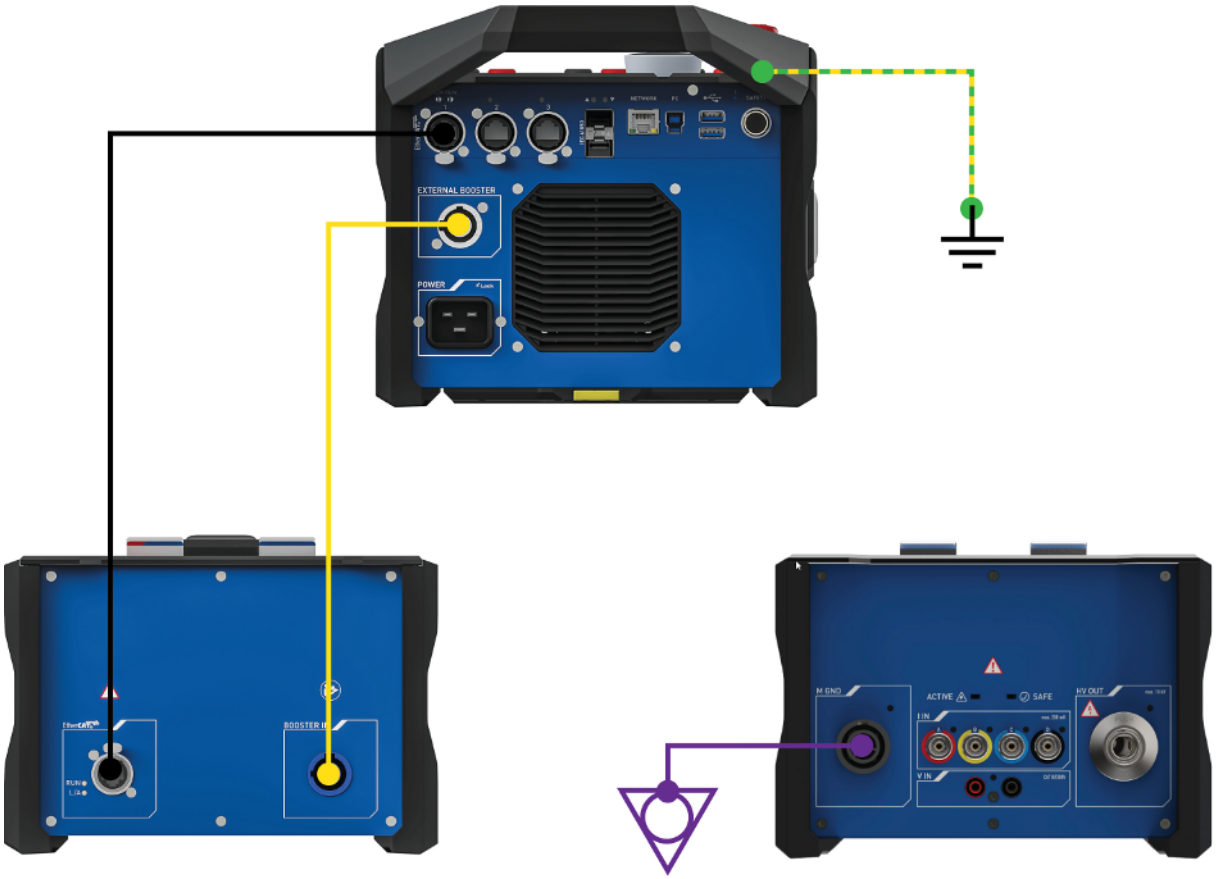

For more information related to the safety functions and wiring operations, refer to the following sections:

- Safety (page 13)
- CPX 200 safety functions and components (page 20)
- HVX10 safety functions and components (page 36)
- Wiring and operation (page 84)

To connect the *HVX10* to the *CPX 200*:

1. Make sure that the green **SAFE** signal light is on and the red **ACTIVE** signal light is off at the *CPX 200*.



2. Remove the **INTERLOCK** key from the *CPX 200* to prevent unauthorized or unintentional activation.
3. Properly connect the *CPX 200* grounding socket to substation ground.
4. Properly connect the *HVX10* measurement ground (**M GND**) to the ground terminal of the test object.

5. Connect the **EXTERNAL BOOSTER** of the *CPX 200* to the **BOOSTER IN** of the *HVX10* by using the provided yellow or orange booster cable.
6. Connect **EtherCAT®** port **1** of the *CPX 200* to the **EtherCAT®** port of the *HVX10*.

EtherCAT® port **2** or **3** of the *CPX 200* can also be used to establish a connection with the *HVX10*.

7. If required by the test setup, connect the *HVX10* test leads to the test object using **I IN A**, **I IN B**, **I IN C**, or **I IN D** as well as **V IN**.

For more detailed information, refer to the wiring diagrams specific to the test.

8. Connect the high-voltage cable to the **HV OUT** output of the *HVX10*.

For more detailed information, refer to the wiring diagrams specific to the test.

▶ Connect the high-voltage cable to the *HVX10* **HV OUT** and make sure the plug is securely fastened. Confirm this by trying to gently pull it out.

9. At the test object, carefully insert the 6 mm high-voltage cable plug into the high-voltage clamp until the plug clicks into place.

▶ The high-voltage cable and clamp are now locked. Verify this by attempting to gently pull them out. It should not be possible.

▶ The following images illustrate how to lock and unlock the connection. This information is also provided on a label attached to the high-voltage cable.

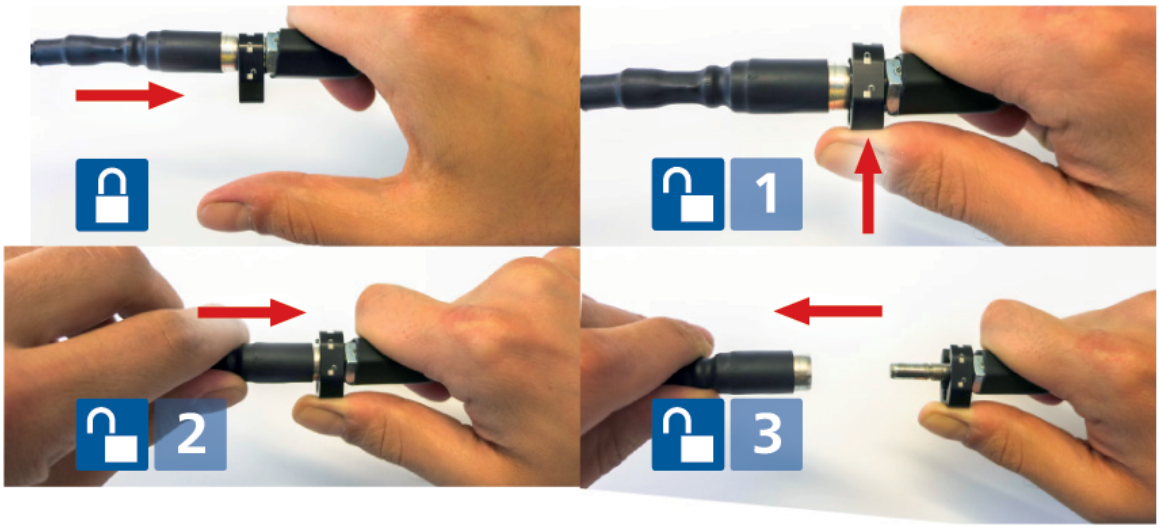

10. Connect the high-voltage clamp to the test object.
11. Once the high-voltage connection from the *HVX10* to the test object is established, use the strain relief provided with the high-voltage cable to secure it to the test object.

⚠ DANGER

Death or severe injury caused by high voltage or current

The high-voltage cable is shielded and therefore safe. However, the 50 cm (20 in) of this cable highlighted in yellow have no shield.

- ▶ Avoid any direct contact of this part of the cable to ground potential and any objects.
- ▶ During a test, consider this part of the cable a live wire and life threatening.

12. Vacate the danger zone and ensure that it is clear of individuals and ready for operation.

⚠ WARNING

Death or severe injury caused by high voltage or current possible

- ▶ Establish a safety barrier to isolate the danger zone.

13. Insert the **INTERLOCK** key into the *CPX 200*.
14. Proceed with the steps specific to the test and software as outlined in the respective test sections.

4.4 Transportation of the CPX 200 and the HVX10

⚠ CAUTION

Injury due to heavy lifting and strain possible

- ▶ To minimize physical strain, carry the *CPX 200* and the *HVX10* separately.
- ▶ To prevent injuries, adhere to ergonomic guidelines for manual material handling.

NOTICE

Equipment damage possible

Failure to comply with the following instructions may result in damage to the devices during transport and could potentially void warranty coverage.

- ▶ When transporting the *CPX 200* and the *HVX10* individually, only use the transport case with correctly installed original foam inlays.
- ▶ If the transport case or foam inlays are damaged or defective, do not transport the *CPX 200* or the *HVX10*.

4.4.1 Separating the CPX 200 and the HVX10

Transporting the *CPX 200* and the *HVX10* devices requires careful consideration due to their weight. To ensure the safety of both the operators and the devices, carry each device separately. This approach minimizes the weight each operator must carry, reducing the risk of strain or injury.

The *CPX 200* units are equipped with a snap lock system that facilitates the mechanical connection to accessory devices like the HVX10.

To separate the units, follow these steps:

1. Locate the yellow snap lock buttons on the *CPX 200* device.
2. Press both snap lock buttons simultaneously.
   ➔ A click sound indicates that the snap lock system has been disengaged.
3. Once the snap lock system is disengaged, the *CPX 200* unit can be carefully tilted towards the user.

Avoid tilting the unit away from the user due to the increased physical exertion required to maintain control of the unit.



Figure 4-3: Separating the *CPX 200* and the *HVX10*

4.4.2 Safe transportation

When relocating the *CPX 200* and the *HVX10* units, adherence to proper lifting techniques is mandatory to ensure operator safety.

When transporting the *CPX 200* or the *HVX10* units individually, it is strongly advised to use both hands for secure handling. Ideally, your arms should be bent at a 90° angle. This position allows for optimal control and movement while carrying the unit.

To ensure safety and prevent potential damage from dropping the devices due to the physical strain from lifting, adhere to the following best practices:

- Apply a firm grip on the handle at all times during transport.
- Engage your core and use your legs to lift, maintaining a stable posture.
- Avoid twisting your body while carrying the unit, pivot with your feet instead.
- If the unit feels too heavy or if you experience strain, set it down safely and ask for assistance.



Figure 4-4: Carrying the *CPX 200* and *HVX10*

If available, the transport cases for the *CPX 200* and the *HVX10* are highly recommended. These cases are specifically designed to fit the units and therefore provide a secure enclosure for the units. In addition, the handles and the wheels can significantly facilitate transportation.

NOTICE

Equipment damage possible

Any movement of the units in the cases during transit could cause potential damage.

▶ Ensure that the units are securely fastened within the transport cases.

4.4.3 Transport case

When transporting the *CPX 200* or the *HVX10* units individually within the transport case, it is imperative to utilize the additional 2 foam inlay pieces. For the *CPX 200* unit, 2 *HVX10* foam inlay pieces are necessary, and conversely, for the *HVX10* unit, 2 *CPX 200* foam inlay pieces are required. These foam inlay pieces are designed to ensure the units are securely stowed within the transport case. Failure to properly place both required foam inlays within the transport case can result in the units moving within the case during transit, potentially leading to transportation damage.

Picture	Usage of the foam inlays
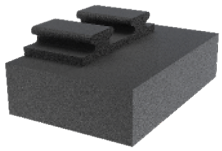	**Transportation instructions for the *CPX 200*:** When transporting the *CPX 200* device on its own within the combined transport case, it is imperative to install 2 foam inlays designed for the *HVX10*. This ensures the *CPX 200* remains securely cushioned during transit. Follow these steps for correct installation: 1. Insert the foam inlays into the transport case, positioning one on the left side and the other on the right side, ensuring they have a stable position at the bottom. 2. Center the *CPX 200* device atop the foam inlays, making sure it is evenly balanced between them for optimal protection during transit.
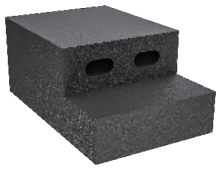	**Transportation instructions for the *HVX10*:** When transporting the *HVX10* device on its own within the combined transport case, it is imperative to install 2 foam inlays designed for the *CPX 200*. This ensures the *HVX10* remains securely cushioned during transit. Follow these steps for correct installation: 1. Insert the foam inlays into the transport case, positioning one on the left side and the other on the right side, ensuring they have a stable position at the bottom. 2. Center the *HVX10* device atop the foam inlays, making sure it is evenly balanced between them for optimal protection during transit.

5 Software Installation

The *CPXpert* software is essential for operating your *CPX 200*. This software package includes the *CPX 200 TouchControl* embedded software as well as necessary firmware for components such as the *HVX10*, **SAFETY LINK**, and the *CPX 200* base unit itself.

5.1 Downloading CPXpert

Follow these steps to access the **OMICRON Customer Portal** and download the *CPXpert* installation package:

1. Open a web browser and navigate to the **OMICRON Customer Portal** at my.omicronenergy.com.
   1.1 Alternatively, use the following QR code:



2. If you are a new user, follow the on-screen instructions to register your account.
3. If you already have an account, log in using your registered email address and password.
4. After logging in, add your *CPX 200* device to your **OMICRON Customer Portal** account.

   Note: Enter your *CPX 200*'s product serial number. You can find the serial number printed on your device or in the **Settings** menu of the *CPX 200 TouchControl* software.
5. Follow the steps in the **OMICRON Customer Portal** to add your product using the *CPX 200* serial number.
6. After successfully adding your *CPX 200*, go to your **Product Dashboard** or the section that lists your registered products.
7. Click on the **Software** option associated with your *CPX 200*.
8. In the **Download software** section, locate the latest version of the *CPXpert* software package and initiate the download.

5.2 Installing CPXpert

Once the *CPXpert* installation file has finished downloading, proceed with the installation on your computer:

For the minimum system requirements to run *CPXpert*, see System requirements (page 64).

1. Double-click on the *CPXpert* installation file to launch the setup wizard.
2. Follow the on-screen instructions.
3. Accept the license agreement and choose an installation directory.
4. Follow all prompts to proceed.

5. Wait for the installation process to be completed. This may include installing and updating necessary system drivers.
6. The installer may prompt you to restart your computer after the installation is complete. If so, restart your computer before attempting to run the software.
7. Launch *CPXpert* from the shortcut created on your desktop or via the Windows Start menu.

5.3 CPX firmware update via CPXpert

The *CPX 200* firmware can be automatically updated by:

- Connecting the *CPX 200* to *CPXpert* (→ Connect/Disconnect tile (page 49)), or
- Accessing the *CPX 200* web interface (→ CPX 200 web interface (page 81)).

It is recommended to perform the firmware update via *CPXpert* to ensure that the *CPX 200* firmware and *CPXpert* version are compatible.

To ensure that the latest version of *CPXpert* is installed, you have the following options:

- **Automatically via the Update Checker**: *CPXpert* includes an integrated update checker that notifies you when a new version is available.
- **Manually via the Update Checker**: If the automatic update checker is disabled, you can manually trigger it by searching for 'Check for CPXpert updates' in the Windows search bar.

To update the firmware of the *CPX 200* and its accessories:

1. Ensure that the *CPX 200* and any accessories are not connected to any test object.
2. Optionally, connect the *HVX10* via an EtherCAT® port or connect all the *OSA1* devices via the **SAFETY LINK** interface. New accessory device firmware will be updated automatically with the *CPX 200* firmware.
3. Connect the *CPX 200* power supply socket to a stable power source.

NOTICE

Equipment damage or loss of data possible

- ▶ Avoid updating the *CPX 200* while it is powered by a generator, as this increases the risk of power supply loss.
- ▶ Power loss during a firmware update can render the *CPX 200* or any connected accessories inoperable.

4. Switch on the *CPX 200* using the power button.



5. Confirm the protective earth information message on the *CPX 200* touchscreen.
6. Connect the *CPX 200* to the computer running *CPXpert* using the supplied Ethernet cable and the PC's Ethernet port.

7. Make sure that the green **SAFE** signal light is on whereas the red **ACTIVE** signal light is off on the *CPX 200*.



8. Open *CPXpert*.
9. Update *CPXpert* if prompted by the update checker.
10. In the *CPXpert* **Home** view, use the **Connect/Disconnect** tile to connect the *CPX 200* to *CPXpert*.
11. If there is a version mismatch between the installed *CPX 200* firmware and the required firmware for using the *CPX 200* with *CPXpert*, an update message will appear.
12. Click **Update test set** to initiate the firmware update process for the *CPX 200* and any connected accessories.
13. Wait until the first stage of the firmware update is complete, then confirm the pop-up window by clicking **OK**.
14. Wait for the *CPX 200* to reboot, then follow the on-screen instructions to complete the firmware update process.

6 CPXpert

CPXpert is the dedicated PC software designed for the *CPX 200*. It provides an interface to the *CPX 200* test set, controls the automated test procedures, and facilitates testing of assets by guiding through the test workflow. In addition, it serves as a platform of comprehensive reports for the tests conducted with either *CPXpert* or *CPX 200 TouchControl* (or *TouchControl* for short in this chapter).

All relevant software and manuals can be downloaded from the OMICRON Customer Portal. In addition, the relevant manuals can be found in the corresponding Help (page 53) section of *CPXpert*.

▶ Make sure that you have the latest version of the *CPX 200* User Manual.

6.1 Home view

When starting the *CPXpert* software or creating a new file, the first view displayed is the **Home** view.



Figure 6-1: **Home** view of *CPXpert*

1	Asset tiles (page 47)	4	Load asset from CORTEX Grid (page 51)
2	File operation (page 48)	5	Title bar (page 52)
3	Connect/Disconnect (page 49)		

The **Home** view is the starting point to start a test session or continue with an existing one. Via the asset tiles, an empty new test document can be created (→ Asset tiles (page 47)).

CPXpert supports multiple windows, allowing you to test multiple assets or perform side-by-side comparisons. For more information, see Multiple CPXpert instances (page 64).

6.1.1 Asset tiles

In the **Home** view, you can create a new *CPXpert* document by clicking on one of the 5 asset tiles. The first 4 asset tiles offer comprehensive nameplate coverage and guided tests for:

- **Power transformer**
- **Current transformer**
- **Voltage transformer**
- **Switchgear**

Guided tests are interlinked with the asset nameplate. The required asset nameplate parameters for each test are available within the asset tiles. When these parameters are filled out within a test, they are synchronized with the asset nameplate. Conversely, when the parameters are already present in the asset nameplate, they are directly entered into the test asset tiles.

The available tests for each asset are listed as follows:

Table 6-1: Overview of the *CPXpert*-supported tests for instrument transformer assets

Current transformer	Voltage transformer
CT Ratio (page 128)	VT Ratio (page 167)
CT Winding Resistance (page 135)	VT Burden (page 171)
CT Excitation (page 140)	VT Polarity Check (page 174)
CT Burden (page 144)	
CT Ratio (V) (page 147)	
CT Polarity Check (page 157)	
LPCT Ratio (page 162)	

Table 6-2: Overview of the *CPXpert*-supported tests for power transformer and switchgear assets

Power transformer	Switchgear
TR Winding DF/PF & C (page 179)	SG Timing (page 230)
TR Bushing DF/PF & C1 (page 190)	SG Static Contact Resistance (page 237)
TR Bushing DF/PF & C2 (page 198)	
TR Ratio (page 203)	
TR Winding Resistance (page 214)	
TR Demagnetization (page 221)	
TR Short-Circuit Impedance/Leakage Reactance (page 225)	

Table 6-3: Overview of the *CPXpert*-supported tests for general testing

Miscellaneous
Quick (page 104)
C/Tan Delta (page 113)
Insulation Resistance (page 123)

The last tile is for the **Miscellaneous** asset, providing basic nameplate support and universally applicable tests.

Universal tests are applicable to all asset types, including the **Miscellaneous** asset. These tests do not have an asset tile and, therefore, are not interlinked with the asset nameplate.

6.1.2 File operation

In the **Home** view, there are 5 options for opening a file:

- **Open document**
- **Open as template**
- **Open CPX 200 file**
- **Load asset from CORTEX Grid**
- **Recent documents**

More file operations, such as **Save** and **Save as**, are accessible in the **File** menu within the *CPXpert* document views.

6.1.2.1 Opening files

Name	Icon	Description
Open document		▶ Click to open a *.cpxpert file saved in the local drive of the PC.
Open as template		▶ Click to open a file and use it as a template.
Open CPX 200 file		▶ Click to open a *.cpx file saved in the local drive of the PC. **Note:** When a *.cpx file is loaded into *CPXpert*, it is automatically converted to a *.cpxpert file. ▶ Remember to save the newly created *.cpxpert file to ensure that all changes and additions are properly stored.

6.1.2.2 Recent documents

The list shows the latest opened files in descending order of date.

1. In the list, choose the file to be opened.
2. Double-click to open it.

On the right side, the button ▪▪▪ provides a quick access to **Use as template** and **Open file location**.

6.1.3 Connect/Disconnect tile

Use the **Connect/Disconnect** tile to establish or terminate the connection between the *CPXpert* software and a *CPX 200* device. This function is accessible from the **Home** view or within an open testing document.

Your *CPX 200* can be connected to only one *CPXpert* instance at a time. To connect the device to a different *CPXpert* instance, first disconnect it from the currently active instance.

6.1.3.1 Connecting to the CPX 200

To connect the *CPX 200* to *CPXpert*:

1. Navigate to the **Connect/Disconnect** tile in the **Home** view or within a testing document view.
2. Click the **Connect/Disconnect** tile.
   → A list displays the available *CPX 200* devices.
3. Select the specific *CPX 200* you wish to connect to.
   → *CPXpert* will initiate the connection process.
   → A warning message will appear, requiring you to ensure PE and ground connection.
4. Click **OK** to proceed with the connecting process.
   → Upon successful connection, the **Connect/Disconnect** tile will update the status and name of the connected device.

Table 6-4: Connected/Disconnected status

Connection status	Icon	Description
No device connected		No *CPX 200* is connected to the *CPXpert* instance.
Connected		A *CPX 200* is connected to the *CPXpert* instance.

To check detailed information about the *CPX 200* devices in the list:

▶ Click the **Settings** button to the right of the device name.
→ The **Device Details** view opens. This view provides essential information about the selected device as well as a toggle switch for automatic connection and a button to start *OMICRON Device Link*.

Table 6-5: Device Details view of *CPXpert*

Item	Description
Device name	Customizable label you can assign to the *CPX 200* to make it easily identifiable within your network. If a device name is set, it will be displayed in the *CPXpert* connection dialog instead of its default name.
IP Address	Displays the unique network identifier assigned to the *CPX 200* in the network.
Version	Shows the *TouchControl* software version currently installed on the connected *CPX 200*.

Item	Description
Connect automatically	When **Connect automatically** is enabled, *CPXpert* will search for the paired *CPX 200* when the software is started. The connection will be established automatically if the device is detected.
Connect	Manually establish a connection to the selected *CPX 200* device.
Start OMICRON Device Link	Launch *OMICRON Device Link*, which provides more possibilities for device interaction.

If the *CPX 200* is not listed in the **Connect/Disconnect** tile:

- ▶ Check for the green and yellow flashing indicator lights on the *CPX 200* Ethernet port to verify that the Ethernet connection is properly established.
- ▶ If the problem persists, ensure that the firewall configuration is properly set (→ Firewall configuration (page 241)).

If the computer is connected to a new *CPX 200* for the first time, the connection must be confirmed in *TouchControl*.

For more information, refer to CPX 200 in a network (page 243).

After the connection is established, *CPXpert* checks the installed firmware version of the *CPX 200*. The *CPX 200* firmware version must match the *CPXpert* version. Otherwise, *CPXpert* will provide you with the option to update or roll back the *CPX 200* firmware version. For more information, see Firmware update via CPXpert.

6.1.3.2 Manually connecting to the CPX 200

If you encounter any problem while connecting to the *CPX 200*, proceed as follows:

- ▶ Temporarily disable any wireless adapter on your computer.
- ▶ Turn off any active VPN software, as it may interfere with the connection.

If the desired *CPX 200* device is not in the list of available devices, you can add it manually.

1. Click on the **Connect/Disconnect** tile.
2. In the dialog box, click **+ Add a device** to access the settings for manual connection.
3. In the **Host or IP** field, enter the IP address of the *CPX 200* device you wish to connect to.
   Tip: You can find the IP address in the device's *TouchControl* settings under **Device** Discovery.
4. Click the **Connect** button.

6.1.4 OMICRON Continuity

Continuity provides data transfer functionality for retrieving asset nameplate information from *CORTEX Grid* into *CPXpert*.

You need an active *CORTEX Grid* server instance within the organization to access the **Continuity** functionality within *CPXpert*.

The **Continuity** functionality requires an active network connection to establish communication with the *CORTEX Grid* server.

While *CORTEX Grid* may support a wider range of nameplate data, *CPXpert* integrates only those datasets compatible with its defined structure.

To configure **Continuity** within *CPXpert* and retrieve asset nameplate data from the *CORTEX Grid* database:

1. Launch *CPXpert*.
2. Verify the *CORTEX Grid* service URL.
   2.1 Click the icon in the title bar in the *CPXpert* **Home** view.
   2.2 Navigate to the **General** tab.
   2.3 Confirm that the address in the **Service URL for CORTEX Grid** field is correct.
3. Authenticate with *CORTEX Grid*.
   3.1 Click **Sign In** in the title bar.
   3.2 Enter your *CORTEX Grid* credentials.

   Note: If your system administrator has enabled two-factor authentication, follow the verification steps.
4. Retrieve asset data.
   4.1 Click **Load asset from CORTEX Grid** in the **Home** view.

   ➔ An overlay window displaying the asset list will appear.

   4.2 To create a new *CPXpert* test document using the selected asset's nameplate parameters, select the desired asset and click **Select**.
   4.3 To close the overlay window without retrieving asset data, click **Cancel**.

For more information regarding **Continuity** and *CORTEX Grid*, refer to the *CORTEX Grid* Help.

6.1.5 Title bar

At the top right of the *CPXpert* window, you can find the title bar for the following purposes:

- Signing in to *CORTEX Grid* (→ OMICRON Continuity (page 51))
- Basic Settings (page 52)
- General Help (page 53) topics
- Changing window size
- Zooming in and out

6.1.5.1 Settings

6.1.5.1.1 General

Language

The language setting in *CPXpert* allows you to interact with the software in your preferred language. Once you choose the desired language, restart *CPXpert* for the changes to take effect.

Temperature

The temperature setting in *CPXpert* allows you to choose between Celsius and Fahrenheit for temperature readings. Changing this setting only affects the displayed unit of temperature in the software. It will not impact the functioning of *CPXpert* or measurement data.

Default Rated Frequency

The default rated frequency in *CPXpert* is the nominal frequency of the asset, usually set at either 50 Hz or 60 Hz. This frequency also affects the default test frequency in the software. Keep in mind that altering the default rated frequency might impact the results of specific tests and assessments.

Loss Index

The **Loss Index** setting in *CPXpert* determines which calculation method is used for the Dissipation/ Power Factor & Capacitance measurements.

- Dissipation Factor = tan δ
- Power Factor = cos φ

For more information, refer to section Theory (page 114).

Based on this setting, either Dissipation Factor & Capacitance (**DF & C**) or Power Factor & Capacitance (**PF & C**) will be used as default test names.

Standard

In *CPXpert*, the standard setting provides options of both IEC and IEEE standards. These standards establish the default terminal names for each asset, which assists in maintaining consistency and clarity when interpreting test set connections and associated test results.

Additionally, for the transformer asset, terminal names can be individually customized in the nameplate section for each test file. This allows for greater flexibility to meet specific testing or reporting needs.

Beeper

The **Beeper** setting determines if the *CPX 200* will emit an acoustic signal during active measurements.

If the **Beeper** setting is deactivated, a warning message will be shown immediately after switching the beeper off, or each time you attempt to connect *CPXpert* to a *CPX 200*.

6.1.5.1.2 Privacy

Privacy Statement

You can access the privacy statement via omicronenergy.com/en/legal/privacy-statement-cpx.

Customer Experience Improvement Program

The Customer Experience Improvement Program (CEIP) collects information about anonymous usage and technical details of *CPXpert* without interrupting your work. This data helps OMICRON identify areas for software improvement. Rest assured, none of the collected information is used to identify or contact you. We highly encourage participation in the program to enhance the *CPXpert* experience for all users!

Data sharing

Below CEIP, there is an option box for your decision about data sharing. By ticking the box, you confirm to share usage statistics with OMICRON.

6.1.5.2 Help

The *CPXpert* **Help** section can be reached via the button in the title bar.

User manual

Open the *CPX 200* User Manual in the default PDF program associated with your Windows system.

Send data to OMICRON Support

In the event of a problem with the software application, *CPXpert* includes a direct **Send data to OMICRON Support** function. When a user selects this option, *CPXpert* automatically creates a zip file. This file contains the *CPXpert* log files, along with specific hardware, firewall, and test-set-related information from your local computer. This file can then be sent via email to the OMICRON Support team to assist with user requests.

You can also send data to OMICRON Support via device error messages during testing.

The following steps outline how to collect data for OMICRON Support:

1. To open the **OMICRON Assist** dialog box, click **Send data to OMICRON Support** in the title bar.
2. In the **OMICRON Assist** dialog box, select your region, and then click **Next**.
3. **OMICRON Assist** will automatically collect your system information. Once this step is complete, click **Next**.
4. Click **Add files**.
5. Browse to the data you want to send, and then click **Next**.

6. Click **Prepare email**.

About

On this tab, you can find the version, copyright, and license information for *CPXpert*.

6.2 Testing document

The test view provides a centralized interface for managing all aspects of a testing procedure, from test selection and configuration to testing and analysis.

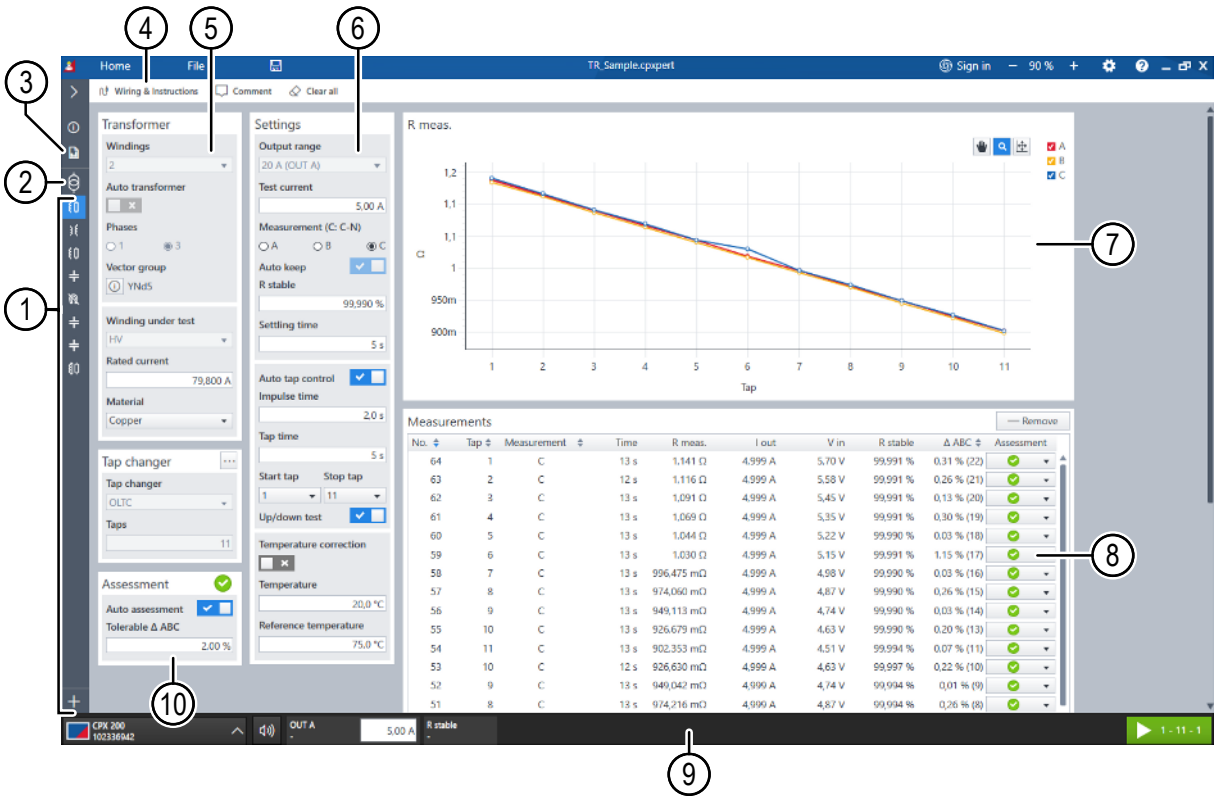

Figure 6-2: Test view of *CPXpert*

No.		Description
1	**Test list**	A list of tests to be performed on the selected asset can be created and managed. Each test can be customized with specific parameters and settings. **Note:** The **Test list** is in the collapsed state in this screenshot.
2	Nameplate (page 58)	This section enables the input and management of the asset data. Any information entered within the asset tile is synchronized with the comprehensive asset nameplate, readily accessible in the **Nameplate** view. **Note:** Some nameplate parameters are locked after the first test execution to preserve data quality. The **Nameplate** is in the collapsed state in this screenshot.

No.		Description
3	Report (page 57)	The Report view generates a Microsoft Word report based on the test document.
4	**Wiring & Instructions**	Displays the wiring diagram for a specific test.
5	Asset data (page 89)	The **Asset data** tile in the test view provides asset data that is essential for the respective test.
6	Test **Settings**	This area provides access to various test settings, including measurement configurations, output options, and assessment criteria.
7	**Plots**	This section displays real-time graphical results of the tests being performed, allowing for visual analysis of asset performance.
8	**Measurements**	This area presents the test results in a tabular format, providing detailed numerical data for further analysis and reporting.
9	Live bar (page 58)	This bar displays the status of the test being performed, including progress and any potential issues.
10	Assessment (page 62)	Comprehensive evaluations of both individual measurement results and aggregate test results. Automatic assessments are conducted for each test result, adhering to predefined assessment limits specified within the assessment tiles. Manual assessments provide the flexibility to appraise each test on a case-by-case basis.

6.2.1 Home

▶ Click the **Home** button to close the open test document and return to the **Home** view.

6.2.2 File menu

The **File** menu is accessible when you have a *CPXpert* testing document open.

▶ Click the **File** button to switch from the test view to the **File** menu.

6.2.2.1 New

▶ Select **New** in the sidebar of the **File** menu to launch a new instance of the *CPXpert* application.

➔ You can now open another test document.

For more details on working with multiple instances of *CPXpert*, refer to Multiple CPXpert instances (page 64).

6.2.2.2 Open

There are multiple ways to open test files and instances. For more details, refer to the following sections:

- Opening files (page 48)
- Multiple CPXpert instances (page 64)

6.2.2.3 Save

When **Save** is selected from the **File** menu, the current state of the document will be saved as a .cpxpert file. If the document is to be saved for the first time, the Windows Explorer will open to allow you to save the document in the desired location. For subsequent saves, the existing saved file will be overwritten with the new content.

CPXpert includes an integrated auto-recovery function. In case of unexpected data loss, the unsaved file state can be restored from the point of the last automatic save (→ Auto-recovery (page 63)).

6.2.2.4 Save as

When **Save As** is selected from the **File** menu, the current state of your .cpxpert file will be saved with a new name or in a specified location. This allows you to create different versions of your work without overwriting the original file.

6.2.3 Overview

The **Overview** section provides a central location to manage key information and settings related to the current testing document.

In the **Overview** view, the general information is organized as follows:

- Test list (page 56)
- Environmental conditions (page 57)
- Work order (page 57)
- Summary (page 57)

6.2.3.1 Test list

In the test list, one or more tests can be selected to perform the following operations:

Name	Icon	Description
Delete		Remove the selected test(s) entirely
Clear		Clear the measurement results of the selected test(s)
Duplicate		Create a new test with the same settings but without measurement results
Arrow Up		Move the selected test one position up
Arrow Down		Move the selected test one position down

The ordering of the tests in the side panel matches the order in the test list.

6.2.3.2 Environmental conditions

This area is dedicated to recording global environmental conditions applicable to the testing session.

Name	Description
Weather	General weather conditions at the location of the asset under test
Ambient temperature	Temperature of the environment at the location of the asset under test
Unit location	Type of location where the asset under test is situated (**Undefined**, **Outside**, or **Enclosed**)
Humidity	Relative humidity measured in percent (%)

6.2.3.3 Work order

Name	Description
Work order	The **Work order** field allows you to record the specific work order number associated with the testing documented in this file for tracking and reference purposes.
Tester name	The **Tester name** field is where you can enter the name of the individual who conducted the tests.

6.2.3.4 Summary

Use the **Summary** section to write notes or provide a general overview of the testing document and the overall testing process or results.

6.2.4 Report

The **Report** view generates a Microsoft Word report based on the test document.

6.2.4.1 Requirements for report generation

Microsoft Office must be installed on the PC or laptop in use.

Refer to System requirements (page 64) for detailed information.

Individual tests are only included in the report if the test data has been generated. Tests without recorded data will not be included.

6.2.4.2 Report customization

The following options and capabilities are available in the **Report** view for customizing and generating the report:

- **Test selection**: You can select or deselect specific tests from the **Test list** to manage which tests will be included in the final report.
- **Report logo**: This option allows you to add the logo of the company that performed the tests or the company the report is intended for.
- **Summary inclusion**: The text you entered in the **Summary** section will be automatically included in the report.

Summary of **Overview** and **Report** are interlinked.

6.2.5 Nameplate and location

The initial view is for filling out the location and the information on the asset nameplate, which is essential for testing and reporting operations.

Filled-out asset data will be automatically synchronized with the individual tests, aiding in test-specific guidance.

Some asset data might be locked after the initial test execution. The locking function aims to preserve the data integrity of the asset nameplate and the testing data.

The asset data which is not locked can be adjusted at any time.

Adjusting unlocked asset data after the initial test execution can trigger recalculation and re-assessment of the measurement results. For example, adjusting one or more tap changer voltages will directly alter the transformer ratio result.

For detailed information about each asset nameplate and location field, refer to the following sections:

- Power transformer (page 89)
- Conventional current transformer (page 95)
- Low-power current transformer (LPCT) (page 97)
- Voltage transformer (page 99)
- Switchgear (page 101)
- Location information (page 102)

6.2.6 Live bar

The *CPXpert* live bar is at the bottom of the screen. It includes all essential elements for test control.

Illustration	Function
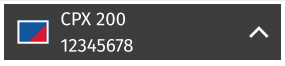	Connect/disconnect the *CPX 200* and the *HVX10* (→ Connect/Disconnect tile (page 49))
	No protective earth device detected by the *CPX 200*
	Temperature indicator for the *CPX 200* and its accessory devices
	Beeper (page 26) toggle
	Output control: Display and adjust the output amplitude during supported tests.
	Start a measurement with the **START** button.

6.2.6.1 Starting a measurement

Initiate a test by pressing the green **START** button 

.

Once a measurement is started, the **START** button will change to a **STOP** button. Additionally, for some tests, a **Keep** button will also be present.

The following table states the control buttons for managing the measurement process.

	With the **STOP** button, you can stop the measurement in progress.
	With the **Keep** button, you can save the currently displayed measurement results. When used in a sequence, the **Keep** button will • save and terminate the measurement at the final row or • save and advance to the next measurement row, if it is not the last. **Note:** This button is accessible during manually controlled tests, such as **Quick**, and when **Auto keep** is deactivated in compatible tests.
	With the output control, you can see the current amplitude being injected for each output. If a pencil icon appears in the left corner, clicking the output control button will reveal the input bar on the right side.

The **START** button will only be operational when all preconditions are fulfilled. If this is not the case, the button will turn yellow, signaling an incomplete setup. Additionally, it will indicate the primary unresolved condition in sequence.

Table 6-6: Statuses that prevent the activation of the **START** button in *CPXpert*

Order	Status	Reason	Symbol
1	**CPX**	The *CPX 200* is not connected to *CPXpert*.	
2	**BLOCKED**	The device is controlled by another client.	
3	**LICENSE**	The license is missing for this configuration.	
4	**CONFIG**	There is mismatch in safety topology.	
5	**HVX**	One of the following reasons: • No *HVX10* is connected. • The booster cable is not connected. • The measurement ground (**M GND**) is not connected. • The high-voltage cable is not connected.	

Order	Status	Reason	Symbol
6	**HC**	No **High Current Module** is available.	
7	**ERROR**	An error dialog is not confirmed.	
8	**INVALID**	An error occurs in range validation or test configuration.	
9	**INTERLOCK**	The *CPX 200* **INTERLOCK** key is not present.	
10	**SAFETY**	The emergency switching off button has been pressed.	
11	**INACTIVE**	The device is in **SAFE** mode. The **SAFE** signal light on the *CPX 200* front panel is continuously illuminated in green.	
12	**TEMP**	The device temperature is out of range.	

6.2.6.2 Output control

Output control is available for tests where it is possible to change the output amplitude before or during the test.

For the Capacitance & Dissipation/Power Factor measurement, the amplitude can be changed within the measurement table itself.

Output control has 2 functions:

- **Setting the output amplitude before starting a measurement**

  The intended target output value can be set with the output control.

  Note: Check the frequency value within the **Setting** tile to set the complementary target frequency.
- **Changing the output amplitude during a measurement**

  For tests where the **Auto keep** setting is set to **Off**, amplitudes can be changed during measurement.

  Note: The new target value is applied once the entry has been confirmed with the **Enter** key.

6.2.6.3 Protective earth

The protective earth missing icon indicates that no protective earth has been detected by the *CPX 200*. Make sure that you have read and understood all safety-relevant information before continuing.

Before setting the *CPX 200* and the *HVX10* into operation to carry out a test, it is essential that you have read and understood the following chapters:

- For *CPX 200* safety functions and components, see CPX 200 safety functions and components (page 20).
- For *HVX10* safety functions and components, see HVX10 safety functions and components (page 36).
- For general wiring and operation, see Wiring and operation (page 84).

6.2.6.4 Temperature

The *CPX 200* and the *HVX10* are equipped with real-time temperature supervision to maintain optimal operating conditions. If the temperature of any used device deviates from the acceptable range, the system will prevent any injection procedures to protect the integrity of the device.

▶ Allow the device to either cool down or warm up, as necessary, to return to the safe temperature range before resuming operation.

Symbol	Reason
	One or more devices are **very hot**, and the temperature is increasing, stable, or decreasing.
	One or more devices are **hot**, and the temperature is increasing, stable, or decreasing.
	Devices are operated in **very cold** conditions < -10 °C (14 °F).
	One or more devices are **overheated**, and no injection is currently possible.

6.2.7 Adding tests

▶ To add new tests, click **+ Add test** in the sidebar.

Available tests are categorized by their test category. For tests like **Ratio** or **Winding Resistance**, specific operations such as the winding (pair) under test can be defined in the respective test views.

When hovering over the test name in the sidebar, you have access to the meatball menu via the ▪▪▪ button.

The meatball menu supports the following functions:

- **Rename**: The test name can be changed to the desired name.
- **Duplicate**: A new test with existing settings and cleared measurement results is added.
- **Clear data**: The measurement results are cleared.
- **Delete**: The test is removed entirely.

6.2.8 Changing the test order

Tests are displayed in the same order as they appear in the side panel. To change the order of tests, you can either drag the selected test to a new position within the side panel or use the arrow buttons to adjust the test order in the **Overview** menu.

The arrow buttons are activated only when at least one specific test in the test list is selected.

6.3 Assessment rules

CPXpert supports comprehensive evaluations of both individual measurement results and aggregate test results.

There are 2 types of assessments:

- Automatic assessment (page 62)
- Manual assessment (page 62)

Automatic assessment

Automatic assessments are conducted for each test result, adhering to predefined assessment limits specified within the assessment tiles.

For test sequences, such as the TR Winding DF/PF & C test, the automatic assessment rule is typically applied to the principal measurement point – often at the rated frequency. Other measurement points can still be manually assessed.

Manual assessment

Manual assessments provide the versatility to appraise each test on a case-by-case basis, initiated from within the measurement table. It is important to note that manual assessments allow for the overriding of automatic assessment rules. This capability enables the assessor to tailor the evaluation criteria based on specific requirements, diverging from the standard applicable assessment rules, when it is necessary to accommodate unique test conditions or objectives.

CPXpert offers the following assessment categories:

Automatic assessment		Manual assessment	
	Pass		Manual Pass
	Investigate		Manual Investigate
	Fail		Manual Fail
	Not rated		Manual Not rated

The final verdict of test assessment is influenced by the most critical assessment within the entire set of measurements. The overall test result reflects the most significant deviation, or the lowest performance encountered during the test.

The categories labeled as ⊘ (Not rated), either automatic or manual, are exempt from this assessment process. These categories do not influence the final test result, allowing for a focused analysis on the rated aspects of the test.

Fail (Priority 1)		Investigate (Priority 2)		Pass (Priority 3)	
	Fail		Investigate		Pass
	Manual Fail		Manual Investigate		Manual Pass

Test result assessment

The comprehensive assessment of the overall test results is displayed in the **Overview**. When an assessment cannot be conducted or is deemed inapplicable – owing to all measurement results being categorized as ⊘ (Not rated) – one of the result states listed in the following table is displayed in place of the overall test assessment.

Result state	Description
Not executed	There are no measurement results available for the test.
Partially executed	Some measurement results are available, but the test is not fully completed.
Executed	All measurement results for the test are available, and the test is fully completed.

6.4 Auto-recovery

The auto-recovery feature in *CPXpert* is designed to protect your data in the event of an unexpected shutdown, such as a sudden drain of laptop battery or loss of connection to the *CPX 200*. Here is how it works:

- **Automatic saving**: *CPXpert* periodically saves a backup of your current work session. This happens in the background and does not interrupt your workflow.
- **Detection of unexpected shutdown**: If *CPXpert* starts up and detects that the previous session ended unexpectedly, it triggers the auto-recovery feature.
- **Recovery prompt**: During start-up, *CPXpert* will prompt you with a recovery option. This allows you to restore the work session from the point of the last automatic save.

  If multiple instances were terminated unexpectedly, the data will be restored to their respective instances. This ensures that each instance recovers its own unique data, maintaining the integrity and continuity of your work across all instances.
- **Restoration**: If you choose to recover the previous session, *CPXpert* will load the backup file(s), allowing you to pick up where you left off.

6.5 Multiple CPXpert instances

In addition to the active instance, a new *CPXpert* instance can be created. This ensures that the ongoing work remains undisturbed.

Multiple *CPXpert* instances can be launched in 2 ways:

- Select **New**/**Open** via the *CPXpert* **Settings** menu.
- Click the *CPXpert* application icon on your desktop or application menu.

Each *CPX 200* system can be connected to only 1 *CPXpert* instance at a time. This ensures that the *CPX 200* system is always accurately synchronized with the active *CPXpert* instance. For more information on connecting and disconnecting, refer to Connect/Disconnect tile (page 49).

To help you identify which *CPXpert* instance is connected to the *CPX 200* system, the title bar of the connected instance will turn red instead of standard blue. This visual cue provides a quick and easy way to recognize the active instance.

6.6 System requirements

To ensure the correct operation of *CPXpert*, your computer has to meet the following system requirements:

Characteristic	Minimum requirements
Operating system	Windows 10, 64-bit, Version 22H2 (10.0.19045) Windows 11, 64-bit, Version 22H2 (10.0.22621)
CPU	Multicore system with 2 GHz or faster
RAM	8 GB
Storage	20 GB
Resolution	Super VGA (1280×768) or higher-resolution video adapter and monitor
DirectX	Compatible with DirectX 12
Microsoft Office	Microsoft Word, Version 2202 (14931.20132)
Interface	RJ45 Ethernet interface USB 3.2 Gen 1 (5 Gbps) interface & USB-C to gigabit Ethernet adapter

Note: If your system does not meet these requirements, you may experience slow performance, reduced functionality, and system instability.

7 CPX 200 TouchControl

For simplicity reasons, *CPX 200 TouchControl* in the following will be referred to as *TouchControl*.

TouchControl is an integrated testing solution that can be operated directly through the *CPX 200* touchscreen interface.

TouchControl provides simple guidance to configure and perform supported tests.

Comprehensive reports can be generated via *CPXpert*. Test files are transferred from the internal storage via USB stick, Ethernet connection, or *OMICRON Device Link*.

After starting *TouchControl*, the **Home** screen with all available tests is displayed in the **Select a test** view. The main parts of this view are shown below.

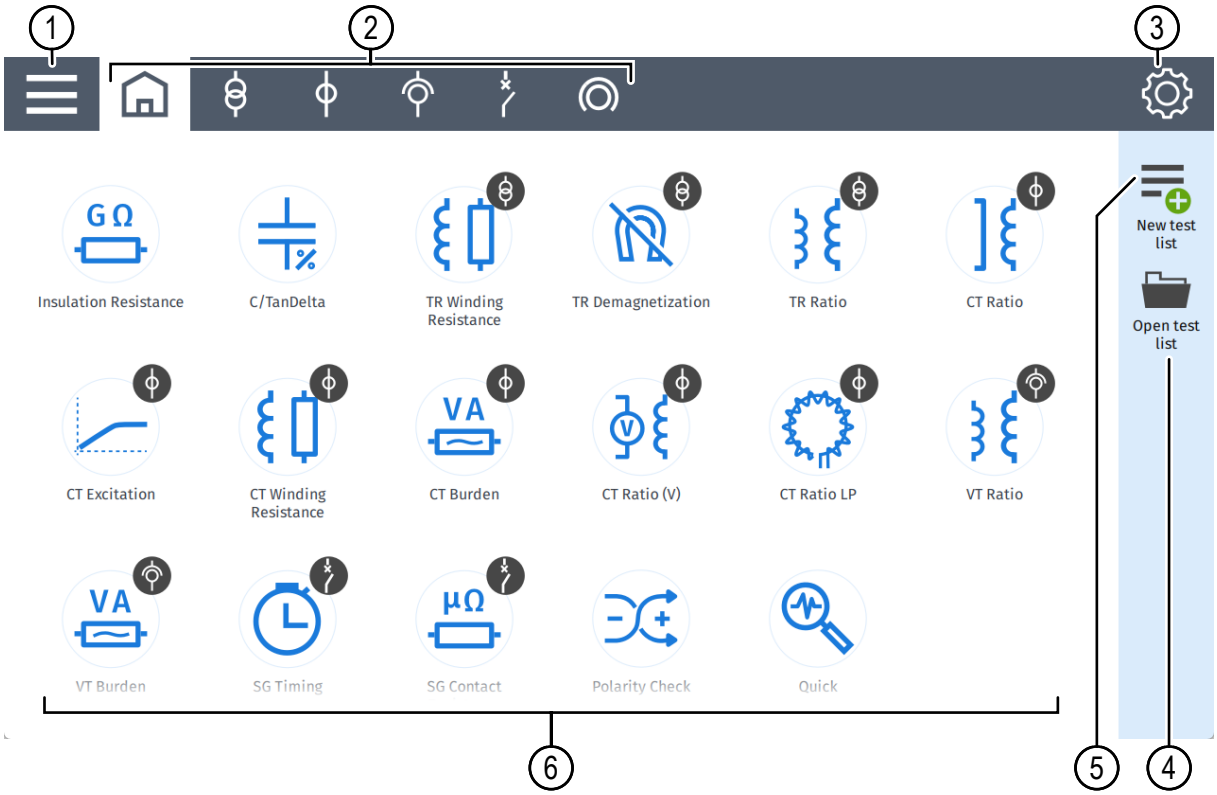

Figure 7-1: *TouchControl* – **Home** view

This view contains 6 main parts allowing the following operations:

1	**Test list function**: Rename or duplicate tests to, for example, conduct subsequent tests with identical settings. Additionally, you can rearrange the order of tests and add comments to individual tests. The number in the top right corner of the **Test list** icon indicates the number of tests within the **Test list**. Up to 20 tests per **Test list** are supported.

2	Toggle between the **Home** view and the application views. Available tests per view are displayed on the screen.
3	In the **Settings** menu, you can change your preferred language, set standard profiles, and adjust hardware behavior such as the beeper volume and display brightness.
4	Tap **Open test list** to load an existing file from the internal storage or external memory.
5	Tap **New test list** to create a new file. The active **Test list** will be automatically saved and closed in the process.
6	Tap on a test to open it and automatically add it to the active **Test list**. **Note:** When you add the first test, the system will prompt you to create a new file. Subsequently, all tests added to the **Test list** will be saved to this file automatically.

7.1 Available tests

TouchControl supports the testing of current transformers, voltage transformers, power transformers, and switchgear assets with specific tests designated for each type of asset.

CPXpert can import and generate reports for tests conducted with *TouchControl*.
Some tests may be exclusively available in *CPXpert*.
You need the **CPXpert Advanced** license to execute tests with *CPXpert*.

Universal

- Quick (page 104)
- C/Tan Delta (page 113)
- Insulation Resistance (page 123)

Current Transformer (CT)

- CT Ratio (page 128)
- CT Winding Resistance (page 135)
- CT Excitation (page 140)
- CT Burden (page 144)
- CT Ratio (V) (page 147)
- CT Polarity Check (page 157)
- LPCT Ratio (page 162)

Voltage Transformer (VT)

- VT Ratio (page 167)
- VT Burden (page 171)
- VT Polarity Check (page 174)

Power Transformer (TR)

- TR Ratio (page 203)
- TR Winding Resistance (page 214)
- TR Demagnetization (page 221)
- TR Short-Circuit Impedance/Leakage Reactance (page 225)

Switchgear (SG)

- SG Timing (page 230)
- SG Static Contact Resistance (page 237)

7.2 File handling

TouchControl features integrated storage for managing all measurement data. The data is organized in **Test lists**. A **Test list** serves as a container for:

- Basic nameplate information
- All individual tests added via the *TouchControl* **Home** view for a specific asset or project

A single **Test list** can contain a maximum of 20 tests.

Only 1 **Test list** can be active at a time. Creating a new **Test list** or opening an existing one will automatically close any **Test list** that is currently active.

Using either **New test list** or **Open test list** opens the **File Browser**.

Table 7-1: Create new or open existing **Test list**

Name	Icon	Function
New test list		Creates a new **Test list** in the *CPX 200* storage.
Open test list		Loads an existing *CPX 200* data file (*.cpx) from the device's internal storage or external storage such as a USB storage device.

In this **File browser**, the following options are available on the right side:

Table 7-2: **File browser** control elements

Name	Icon	Function
New folder		Creates a new folder where the **Test list** file can be saved.
Rename		Renames **Test list** files or folders.
Delete		Deletes **Test list** files or folders.
Copy		Copies **Test list** files or folders to another directory.

Name	Icon	Function
Move		Moves **Test list** files or folders to another directory.
Cancel		Cancels the current **Move** or **Copy** operation.

The middle part of the **File browser** displays the **Test lists** and folders available for selection.

- ▶ Tap to open a **Test list** or folder.
- ▶ Tap and hold to select an item.

Table 7-3: **File browser** directory control elements

Name	Icon	Function
Back		Navigates to the parent directory (one level up)
Not Sorted		Displays files and folders in their default, unsorted order
Ascending Sort		Sorts files and folders in ascending order
Descending Sort		Sorts files and folders in descending order

Files and folders can be sorted by **Name**, **Date**, or **Size**.

Only one property (**Name**, **Date**, or **Size**) can be used for sorting at a time. Selecting a different sorting property or direction will replace the current sorting order.

7.3 Sidebar

The sidebar contains various commands for the **Test list** you are working on.

▶ In the test view, tap **Test list** in the sidebar to expand the **Test list**.

7.3.1 Test list functions

Table 7-4: Sidebar buttons **Test list** interactions

Name	Icon	Function
Test list		Display the manual **Test list** and access the functions described in the table below. If the list contains tests, the number of tests in the list is indicated by a number indicated at the top right corner of this icon. **Example**: The icon on the left indicates the list has one test saved on it. If the list is empty, no numerical value is displayed beside the icon.

Name	Icon	Function
Save		Save the **Test list** and its settings.
Save as		This icon is displayed when you tap and hold the **Save**  button. ▶ Tap to save the open **Test list** under a different name.

Table 7-5: Sidebar options for **Test list** interactions with the **Test list** opened

Name	Icon	Function
Edit asset		Edit asset parameters related to the test.
Rename		Rename the selected test (max. 60 characters).
Duplicate		Duplicate the selected test and its settings. **Note:** Results are not copied.
Up		Move the selected test up in the **Test list**.
Down		Move the selected test down in the **Test list**.
Comment		Write a comment for the selected test.
		View and edit a previously written comment for the test. **Note:** This icon indicates that the selected test has a comment which can be edited.
Delete		Delete the selected test.

7.3.2 Edit asset



To edit general asset settings, tap the **Test list** button and then the **Edit asset** button on the top right side of the expanded **Test list** sidebar. When you import tests into *CPXpert*, tests will be attributed to the asset based on the serial number.

Asset

▶ Tap the **Asset** drop-down list to select the asset.

▶ Enter the **Serial number** and **Manufacturer** into the appropriate entry fields.

Bushing

Note: This is only available if **Transformer** was selected as asset.

▶ Select the number of **Bushings** from the drop-down list.

▶ Enter their **Serial numbers** into the appropriate entry fields.

▶ To copy the first serial number entered to the rest of the serial number fields, tap **Copy to all**.

▶ Tap **OK** to save the settings.

Execution state icons

The following icons indicate the execution state of tests in the **Test list**:

Table 7-6: Execution state icons

Icon	State
	Data necessary for test execution are missing
	Test not yet executed – ready for execution
	Test partially executed
	Test executed

If a mandatory setting has not been defined for a test, the **START** button is replaced by the **INVALID** icon and the test cannot be started before the missing setting has been properly defined via **Settings** view. The missing parameter requiring entry is indicated with the 

icon displayed in the **Settings** view with the possible range shown when applicable.

7.4 Status indicators

The icons in the lower menu bar of the *TouchControl* software represent the device statuses.

Table 7-7: Status icons in the lower menu bar

Icon	Description
	No USB drive connected
	USB drive connected ▶ Tap to safely remove the USB drive. Any unsaved changes will be saved.
	The *CPX 200* cannot detect a connection to protective earth.

7.5 TouchControl settings

To open the **Settings** view, tap the **Settings** icon on the top right side of the **Home** view.

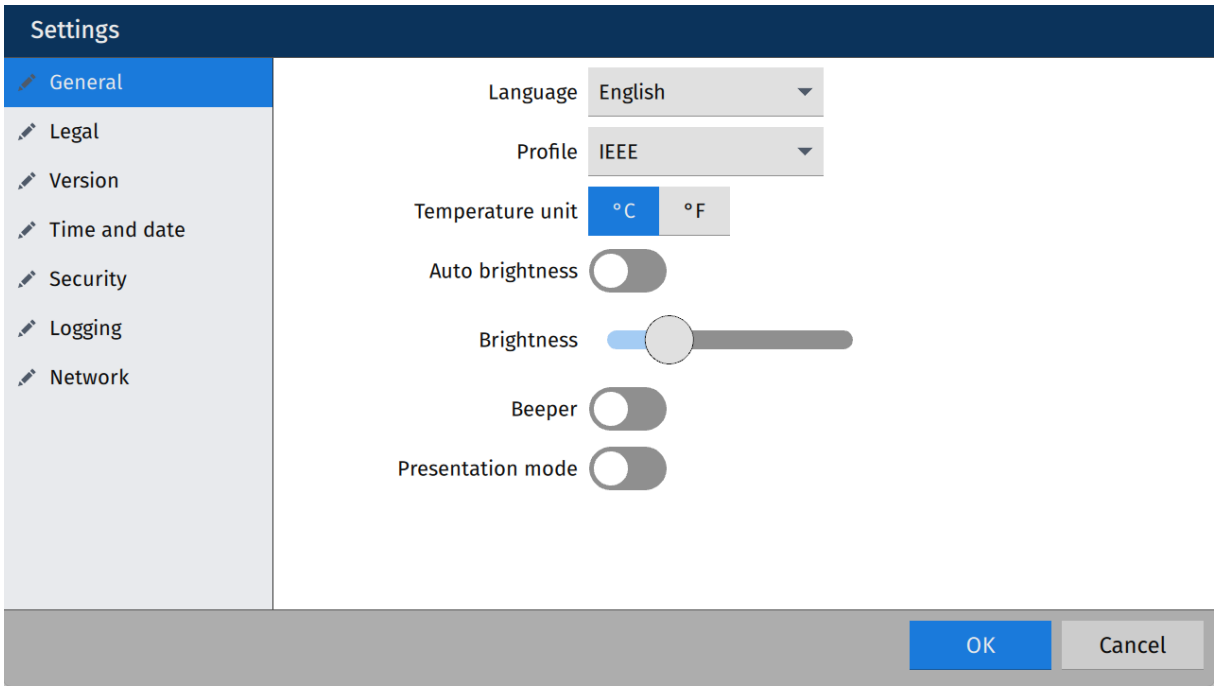

Figure 7-2: *TouchControl* **Settings** - **General**

In the left pane in the **Settings** view, you can access the following sections:

Category	Description
General	In the **General** view, you can configure various settings that affect hardware, the user interface, and testing.
Legal	The **Legal** section provides details about the third-party software components and functions used. For more information, refer to Open-source license information (page 249).
Version	The **Version** section provides device-related information, such as the firmware version and serial number.
Time and date	The **Time and date** section allows you to set the clock for the *CPX 200*. Adjust these settings according to regional requirements to ensure accurate timestamps on reports.
Connection	**Connection** handles allow and deny functions for external clients. For more information, refer to CPX 200 in a network (page 243).
Logging	The **Logging** section manages the service log level of the *CPX 200*, aiding OMICRON Support (→ Support (page 280)) in addressing test errors and device-related inquiries.
Device discovery	The **Device discovery** view manages the *CPX 200*'s visibility in connected networks.

Category	Description
Device Web Interface	The **Device Web Interface** view lets you allow or block access to the CPX 200 web interface (page 81).

7.5.1 General

This section contains options for selecting the system interface language, the correct standard profile, preferred temperature unit, auto save function, screen display brightness, beeper function, presentation mode, and the device self-test.

Option	Description
Language	Tap the **Language** drop-down box to change the system language.
Profile	Tap the **Profile** drop-down box to choose between the IEEE and IEC profile, depending on the standard commonly used in your location. The profile defines which default frequency is set when opening a new test. • IEC = 50 Hz • IEEE = 60 Hz
Temperature unit	Select the preferred temperature unit (°C or °F).
Auto brightness	Set **Auto brightness** to **ON** to automatically adjust the touchscreen brightness. Brightness level is based on the light intensity detected by the ambient light sensor located on the front panel of the *CPX 200*. For more information, refer to Ambient light sensor (page 26).
Brightness	Adjust screen brightness by moving the **Display brightness** slider.
Beeper	Set **Beeper** to **ON** to enable acoustic safety feedback from the *CPX 200*. For more information, refer to Beeper (page 26).
Presentation mode	Presentation mode is an internal function of OMICRON. If you have any questions or uncertainties, contact OMICRON Support (→ Support (page 280)).
Device self-test	If *TouchControl* or *CPXpert* repeatedly displays a hardware error message, we recommend performing a device self-test. The self-test checks the functionality of the *CPX 200* hardware components. If the self-test passes but the error messages persist, check the wiring. **Note:** During the self-test, the emergency switching off button must be released.

7.5.2 Legal

The **Legal** section provides details about the third-party software components and functions used. For more information, refer to Open-source license information (page 249).

7.5.3 Version

Relevant device information of the *CPX 200* is stated in the **Version** view.

Category	Description
Release information	Release information for the *TouchControl* software version states the year and month of the build.
Software version	Software version running on *TouchControl*
Serial number	Serial number of the *CPX 200* device
Calibration date	Last calibration date in YYYY-MM-DD format **Note:** This field can only be adjusted by OMICRON and is included in the standard reports within *CPXpert*. External calibration services cannot change this field.

7.5.4 Time and date

This option enables setting the current time and date using the appropriate **Up** or **Down** buttons. Confirm setting by selecting **OK**, exit without saving by selecting **Cancel**.

Category	Description
Time	Local time for the *CPX 200*.
Date YYYY-MM-DD	Calendar date for the *CPX 200*. **Note:** The date field will be displayed within the *CPXpert* report.

7.5.5 Connection

The **Connection** view handles the communication access to external clients, including *CPXpert* and *OMICRON Device Link*.

Category	Description
Accepted external devices	Click **Clear** to revoke the automatic external connection for all accepted devices.
Blocked external device	Click **Clear** to revoke the automatic external connection for all blocked devices.
Time to accept connection	Duration of time that the device connection window will be displayed during external connection attempts with the *CPX 200*. For more information, refer to CPX 200 in a network (page 243).
Hide all API ports from external LAN (Block external client access)	If activated, the *CPX 200* integrated firewall will block all external network access, including *CPXpert* and *OMICRON Device Link*.

7.5.6 Logging

The **Logging** section manages the service log level of the *CPX 200*. In case of unit malfunction or suspicious behavior, the service log files will help OMICRON Support to provide assistance.

Item	Description
Logging level	Service log level for the *TouchControl* system. **Default option** • **Errors only** Provides a balanced selection of the most relevant information for OMICRON Support. **Alternative options:** • **Info** Provides full service log information. System performance might be slowed when this option is selected. Only recommended for providing specific information to OMICRON Support. • **Disabled** No service logs are generated.
Device logging level	Service log level for the *TouchControl* real-time system. **Default option** • **Errors only** Provides a balanced selection of the most relevant information for OMICRON Support. **Alternative options:** • **Info** Provides full service log information. System performance might be slowed when this option is selected. Only recommended for providing specific information to OMICRON Support. • **Disabled** No service logs are generated.
Device log files	Log files can be downloaded to a connected flash drive. **Note:** When connected to *CPXpert*, log files can also be automatically uploaded to the PC.

7.5.7 Device Discovery

The **Device Discovery** view manages the *CPX 200* visibility in connected networks.

For more information, refer to Firewall configuration (page 241).

Category	Description
Friendly name	Label assigned to the *CPX 200* to make it easily identifiable within a network. When the friendly name is specified, the *CPXpert* connection dialog will display the friendly name instead of the default name “CPX.”
IP Address	A unique identifier assigned to each device in a network.
Subnet mask	Defines the network and host portions of an IP address.
Standard gateway	The device that routes traffic from a local network to other networks or the internet.
Hide this device on network	When this setting is activated, all UDP requests and PING/ECHO requests are blocked. The *CPX 200* might not be visible in *CPXpert* and *OMICRON Device Link* when this setting is activated. **Note:** External device connections can still be established even when the **Hide this device on network** setting is activated.

7.5.8 Device Web Interface

When **Hide web interface on network** (**Disable web interface**) is activated, access to the *CPX 200* web interface is blocked. Attempting to access it will result in a connection timeout message in the browser.

7.6 Testing with TouchControl

7.6.1 Test views

Each test contains up to 3 test views, accessible via the top bar:

	**Test settings view** Configure parameters and conditions for a test.
	**Measurement view** View real-time data and results as the test progresses.
	**Plot view** Analyze graphical representations of the test results.

7.6.1.1 Starting a measurement

▶ Initiate a test by sliding the green arrow within the **START** button  to the right.

The **START** button will only be operational when all preconditions are fulfilled. If this is not the case, the button will turn yellow, signaling an incomplete setup. Unresolved conditions will be indicated in sequence.

Table 7-8: Statuses that prevent the activation of the **START** button in *TouchControl*

Order	Start button status	Error text	Symbol
1	**BLOCKED**	The device is controlled by another client.	
2	**LICENSE**	The license is missing for this configuration.	
3	**CONFIG**	There is a mismatch in the SAFETY LINK topology.	
4	**HVX10**	One of the following reasons: • No *HVX10* is connected. • The booster cable is not connected. • The measurement ground (**M GND**) is not connected. • The high-voltage cable is not connected.	
5	**HC**	No **High Current Module** is available.	
6	**ERROR**	An error dialog is not confirmed.	
7	**INVALID**	An error occurs in range validation or test configuration.	
8	**INTERLOCK**	The **INTERLOCK** key for the *CPX 200* is not present.	
9	**SAFETY**	The emergency switching off button has been pressed.	
10	**INACTIVE**	The device is in **SAFE** mode. The **SAFE** signal light on the *CPX 200* front panel is continuously illuminated in green.	
11	**TEMP**	The device temperature is out of range.	

7.6.1.2 Measurement control

In each test view, you can configure and fine-tune the measurement process:

- ▶ Update asset information and settings, for instance, by entering numerical values, selecting options from drop-down menus, and toggling on/off switches.
- ▶ Control measurements directly through the interactive live bar.

Live bar

The live bar, located at the bottom of each view, contains controls for managing the measurement process:

	**Stop button** Stops the measurement in progress.
	**Keep button** Saves the measurement results. When used in a sequence, the **Keep** button will either: • Save and terminate the measurement at the final row, or • Save and advance to the next measurement row if it is not the last. **Note:** This button is accessible during manually controlled tests, such as Quick, and when **Auto keep** is deactivated in compatible tests.
	**Output control button** Shows the current amplitude being injected for each output. If a pencil icon appears in the left corner, clicking the **Output Control** button will reveal the input bar on the right side

Numerical input fields

In the test views, you can use numerical input fields for precise data entry and parameter adjustments.

When you select a numerical input field, the numerical keypad will appear on the right. Additionally, for target values, you can also access the keypad by clicking on the corresponding output values in the live bar. Moreover, it is now possible to incrementally adjust target values using the jog-dial handwheel for precise control.

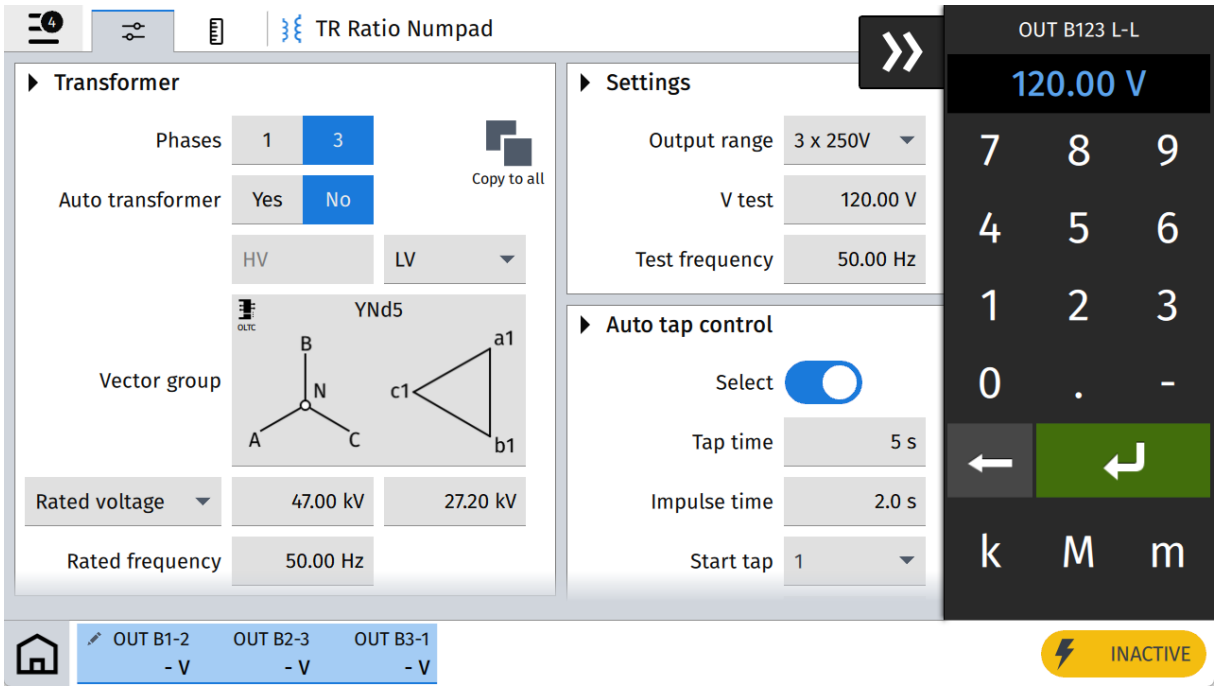

Figure 7-3: Numpad functionality

Entering values via the numerical keypad

Tap **Enter** to confirm your input on the numerical keypad. You can also use metric prefixes to apply a unit factor to the entered value:

- k for kilo (10^3)
- M for mega (10^6)
- m for milli (10^-3)

If the entered value exceeds the permissible range, the *CPX 200* will automatically recalibrate it to the nearest maximum or minimum allowable value. A warning message will be displayed above the left segment of the live bar to inform you about this adjustment.

7.6.1.3 Test settings view

In the test settings, you can specify asset details and measurement parameters. If any required information is missing or falls outside the acceptable range, the corresponding fields will be highlighted with an exclamation point icon .

Asset parameters

Tests categorized outside the **Universal** group will display essential asset nameplate values in the top-left tile.

Modifying the nameplate data can affect subsequent measurement sequences.

Once test results are available for each test, certain asset nameplate fields will become locked to maintain the integrity of the measurement data.

Note: Adding new tests for an existing asset will prompt an automatic transfer of the latest asset data to the newly added test.

Note: Nameplate data that are locked can be adjusted on a per-test basis only after clearing all associated measurement results.

Note: If there is a discrepancy in nameplate information for tests of the same asset type, *CPXpert* will separate the **Test list** into separate assets during the import to reflect each unique set of data.

Right-hand bar test view options

The right-hand bar within the test view offers the following options for selection:

	**Wiring** Based on the entered asset data, corresponding wiring diagrams are displayed for reference.
	**Clear all results** Erase all measurement results for each individual test.

7.6.1.4 Measurement view

In the **Measurement** view, results are presented in a tabular format.

The **Measurement** view is divided into 2 parts:

- Overview displaying the most important results
- Detailed view accessible via the arrow button

Right-hand bar Measurement view options

	**Wiring** Displays corresponding wiring diagrams for reference, based on the entered asset data.
	**Assess** User-defined assessment for the test
	**Add meas.** Adds new measurement block to the test.
	**Delete meas.** Removes the selected measurement block from the test.
	**Clear result** Erases the selected result.
	**Clear all results** Erases all measurement results for each individual test.
	**Delete all meas.** Removes all measurement blocks from the test.

User-defined test assessments

▶ Use the **Assess** button to assign the entire test to a user-defined assessment category.

The user-defined assessment is subject to change and can be overwritten at any time.

You can choose between the following assessment categories:

	**Pass** The measurement results satisfy all required criteria.
	**Investigate** The measurement results indicate irregularities which should be investigated.
	**Fail** The measurement results do not meet the essential performance criteria and should be considered for immediate rectification.
	**Not assessed** The measurement results have not been evaluated yet to verify compliance with the established standards.

7.6.1.5 Plot view

For some measurements, the **Plot** button is available in the top menu bar.

▶ Tap the **Plot** button to view various graphs related to the measurement, when applicable.

7.6.2 Actual measurement

▶ Refer to Safety instructions (page 14) for detailed information about safe testing.

▶ If in doubt, contact OMICRON Support (→ Support (page 280)).

⚠ DANGER

Death or severe injury caused by high voltage or current

▶ Do not disconnect any cables while the measurement is running.

▶ Only remove cables when **all** of the following apply to the *CPX 200*:

▶ The red signal light on the front panel is **off**.

▶ The indicator lights for the outputs on the front panel indicate a safe state of the outputs (→ Indicator lights (page 23) and Safety and status indicators (page 23)).

▶ The green signal light on the front panel is **on**.

➡ If all lights on the *CPX 200* are off, the device is defective or not connected to power supply.

⚠ WARNING

Death or severe injury caused by high voltage or current possible

▶ Do not enter the danger zone during the test.

▶ Do not touch any part of the test object before grounding and short-circuiting its terminals.

	1. Make sure the **INTERLOCK** key is inserted and the *CPX 200* is set to the **ACTIVE** mode via the operational mode button.
	2. To start the measurement, slide the circled arrow on the **Start** button from left to right.
	3. To stop the measurement, tap **Stop**.



4. The red (**ACTIVE**) signal light is now flashing.

▶ In an emergency, press the **emergency switching off** button to stop the test.

Note: A measurement can also be canceled by setting the *CPX 200* to the **SAFE** mode via the operational mode button or by removing the **INTERLOCK** key.

5. After the measurement is completed or stopped, the green (**SAFE**) signal light switches on and *TouchControl* displays the results in the **Measurement** view.

7.7 CPX 200 web interface

Each *CPX 200* unit features a built-in web interface. You can use the associated PC's IP address to access it securely through HTTPS.

The web interface of the *CPX 200* facilitates the management of

- **Firmware updates**, ensuring the device runs the latest software version;
- **License updates**, to maintain current and active software features;
- **Log file collection**, for efficient troubleshooting and system monitoring.

To access the web interface of the *CPX 200*:

1. Launch the *OMICRON Device Link* application.
2. Select the *CPX 200*.
3. Click **Open web interface** to proceed.
   ➔ A website with the IP address of the device opens in the default web browser.

7.7.1 Firmware update

To update the firmware of the *CPX 200* within the **Update** tab, follow these steps:

1. Click **Choose File** to browse for the update file.
2. Select the appropriate update file from your local file system.
3. Click **Start Upload** to initiate the firmware update process.
4. Once the update is complete, reboot the system to activate the new firmware version.

7.7.2 License update

To manage your license files in the **License** tab of the *CPX 200*:

1. Click **Choose File** to locate a license file.
2. Navigate to the desired license file and select it from your system.
3. Click **Start Upload** to begin transferring your license file to the device.

7.7.3 Other functions

Status

This tab provides information about the device and network.

Service

On this tab, you can collect log files, roll back to a previous software version, or reboot the device.

Service	Description
Collect log files	Collect the log files that are used by OMICRON Support to resolve issues more effectively.
Rollback image	Revert to the previous version.
Reboot now	Restart the device.

About

On this tab, you can download the open-source manifests for:

- Complete system
- Realtime subsystem
- Display subsystem

8 CORTEX Grid

CORTEX Grid is OMICRON's cloud-based data management solution for *CPXpert*, *Primary Test Manager* and *CT Analyzer Suite*. It manages assets (nameplates) and you can create measurement projects and upload measurement results as well as additional project-related data such as documents or image files. Stored nameplates can also be downloaded to CPXpert via OMICRON **Continuity** to speed up the measurement process and ensure consistency. For more information on **Continuity** refer to OMICRON Continuity (page 51).

9 Wiring and operation

9.1 Safety information

- For general safety instructions, see Safety (page 13).
- For information about *CPX 200* safety functions and components, see CPX 200 safety functions and components (page 20).
- For information about *HVX10* safety functions and components, see HVX10 safety functions and components (page 36).
- If in doubt, contact OMICRON Support (→ Support (page 280)) for more information.

9.1.1 Connecting/disconnecting test leads

▶ Before connecting/disconnecting test leads to the *CPX 200* or *HVX10*, make sure that you have read and understood the safety section and follow the wiring instructions stated in this document.

▶ Only connect/disconnect test leads to the outputs and inputs of the *CPX 200* or *HVX10* when the green **SAFE** signal light is on and the red **ACTIVE** signal light is off.

Wiring of capacitive loads

⚠ DANGER

Death or severe injury caused by high voltage or current

Some test objects (for example, voltage transformers, cables, and rotating machines) may have high-capacitive parts and can store a dangerous amount of energy.

▶ Before entering the danger zone, always discharge potentially lethal capacitive loads.

Wiring of inductive loads

⚠ DANGER

Death or severe injury caused by high voltage or current

If charged with current, inductive loads may store a dangerous amount of energy.

▶ Only use the **OUT A** or **HC OUT (100 A)** output to carry out DC tests on inductive test objects to ensure proper discharging of the connected load.

▶ Never use the **HC OUT (1000 A)** output to carry out DC tests on inductive test objects. The **HC OUT (1000 A)** output does not have an active discharge functionality.

9.2 Basic steps to carry out a test with the CPX 200

9.2.1 Test setup

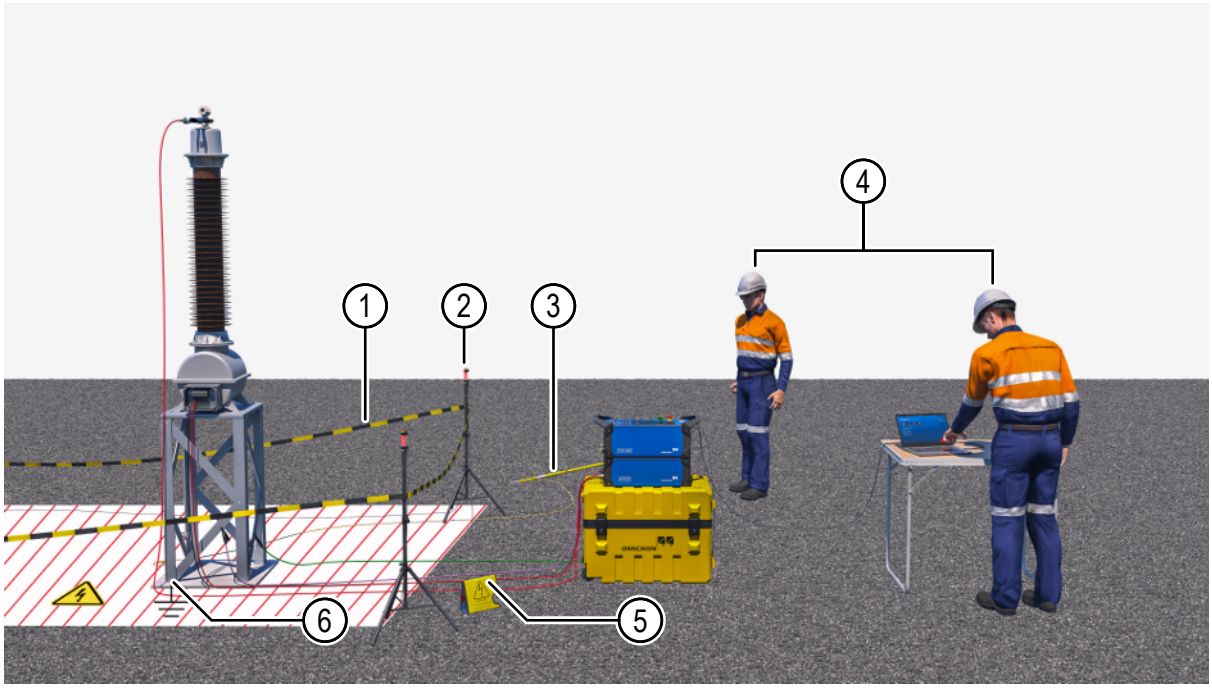

Figure 9-1: Test setup for a VT Ratio test with the *CPX 200* and the *HVX10*

No.	Description	No.	Description
1	Safety barrier	4	Multi-person testing team
2	*OSA1* warning lamps	5	*CPX 200* display cover as a warning shield
3	Grounding rod	6	Proper asset and device grounding

The *CPX 200* is designed to test a variety of assets, including power transformers, current transformers, voltage transformers, and switchgear. For a detailed overview of the supported applications and tests, refer to Available tests (page 66).

9.2.2 Connecting and preparing for signal output

1. Define a work area and a danger zone around the test object and secure the danger zone sufficiently against unauthorized access, for example using a safety barrier and signs.
2. Connect the grounding terminal of the *CPX 200* to the substation ground using the grounding cable delivered with the *CPX 200*. When working with the *HVX10*, make sure that the Measurement Ground (**M GND**) is connected to the grounded terminal of the test object.

⚠ DANGER

Death or severe injury caused by high voltage or current

The output signals of the *CPX 200* can carry up to 300 V.

The output signals of the *HVX10* can carry up to 10 000 V.

Capacitive loads: Some test objects may have high-capacitive parts and can store a lethal amount of energy.

Inductive loads: If charged with current, inductive loads may store a dangerous amount of energy.

- ▶ Only connect/disconnect test leads to the outputs and inputs of the *CPX 200* or its accessories when the green **SAFE** signal light is on and the red **ACTIVE** signal light is off.
- ▶ Use safety test leads whenever possible.
- ▶ Capacitive loads: Make sure that capacitive loads are always discharged before connecting/disconnecting the *CPX 200*.
- ▶ Inductive loads: Make sure that inductive loads are always discharged before connecting/disconnecting the *CPX 200* or its accessory device.

3. Make sure that the power supply to the *CPX 200* is turned off.
4. Remove the **INTERLOCK** key from the *CPX 200*.
5. Connect the *CPX 200* to the power supply with the provided cable.
6. Switch on the *CPX 200* by pressing the power button.
   → The *CPX 200* is ready for wiring as soon as the green **SAFE** signal light is on and the red **ACTIVE** signal light is off.

NOTICE

Equipment damage due to infeed possible

Infeed of voltages from external sources may damage the outputs and inputs of the *CPX 200* and its accessory device.

- ▶ Always ensure that the *CPX 200* is connected to live parts of the asset last.

7. Optionally, connect the *CPX 200* to the control computer.
8. Connect the *CPX 200* to the test object according to your test setup using the test leads and adapters.
9. Connect the *CPX 200* or *HVX10* to the test object.
10. Insert the **INTERLOCK** key.
11. To change from **SAFE** to **ACTIVE** mode, press the operational mode button.
    → The red **ACTIVE** signal light is on, and the green **SAFE** signal light is off.
12. Start the test sequence using *CPXpert* or *TouchControl*.
    → As soon as the test is started, the red **ACTIVE** signal light flashes slowly (1 Hz).

9.2.3 Changing the wiring

⚠ DANGER

Death or severe injury caused by high voltage or current

The output signals of the *CPX 200* can carry up to 300 V.

The output signals of the *HVX10* can carry up to 10 000 V.

Capacitive loads: Some test objects may have high-capacitive parts and can store a lethal amount of energy.

Inductive loads: If charged with current, inductive loads may store a dangerous amount of energy.

- ▶ Only connect/disconnect test leads to the outputs and inputs of the *CPX 200* or its accessories when the green **SAFE** signal light is on and the red **ACTIVE** signal light is off.
- ▶ Use safety test leads whenever possible.
- ▶ Capacitive loads: Make sure that capacitive loads are always discharged before connecting/ disconnecting the *CPX 200*.
- ▶ Inductive loads: Make sure that inductive loads are always discharged before connecting/ disconnecting the *CPX 200* or its accessory device.

1. To change from **ACTIVE** to **SAFE** mode, press the operational mode button.
   → While the red **ACTIVE** signal light flashes quickly (10 Hz), the *CPX 200* is discharging internal and external energies.
2. Wait until the green **SAFE** signal light is on and the red **ACTIVE** signal light is off.
   → The *CPX 200* is ready for wiring.
3. Remove the **INTERLOCK** key to prevent unauthorized activation while changing the wiring.

NOTICE

Equipment damage due to infeed possible

Infeed of voltages from external sources may damage the outputs and inputs of the *CPX 200* and its accessories.

- ▶ Make sure that the *CPX 200* is not connected to an external voltage source.

4. Change the wiring according to your test setup.
5. Insert the **INTERLOCK** key.
6. To change from **SAFE** to **ACTIVE** mode, press the operational mode button.
   → The red **ACTIVE** signal light is on, and the green **SAFE** signal light is off.
7. Start the test sequence using, for example, *CPXpert* or *TouchControl*.
   → As soon as the test is started, the red **ACTIVE** signal light flashes slowly (1 Hz).

9.2.4 Disconnecting and switching off

⚠ DANGER

Death or severe injury caused by high voltage or current

The output signals of the *CPX 200* can carry up to 300 V.

The output signals of the *HVX10* can carry up to 10 000 V.

Capacitive loads: Some test objects may have high-capacitive parts and can store a lethal amount of energy.

Inductive loads: If charged with current, inductive loads may store a dangerous amount of energy.

- ▶ Only connect/disconnect test leads to the outputs and inputs of the *CPX 200* or its accessory device when the green **SAFE** signal light is on and the red **ACTIVE** signal light is off.
- ▶ Use safety test leads whenever possible.
- ▶ Capacitive loads: Make sure that capacitive loads are always discharged before connecting/ disconnecting the *CPX 200*.
- ▶ Inductive loads: Make sure that inductive loads are always discharged before connecting/ disconnecting the *CPX 200* or its accessories.

1. To change from **ACTIVE** to **SAFE** mode, press the operational mode button.
   → While the red **ACTIVE** signal light flashes quickly (10 Hz), the *CPX 200* or *HVX10* is discharging internal and external energies.
2. Wait until the green **SAFE** signal light is on and the red **ACTIVE** signal light is off.
   → The *CPX 200* or *HVX10* is ready for wiring.
3. Remove all test leads and adapters.
4. Switch off the *CPX 200* by pressing the power button.
   → Both the green **SAFE** and the red **ACTIVE** signal lights are off.
5. Disconnect the *CPX 200* from the power supply.

9.3 Cleaning

Preconditions

- ✓ The device is switched off/de-energized.
- ✓ All connection cables and accessories are disconnected from the device.

- ▶ Clean the device and its accessories with a cloth dampened with isopropanol alcohol.

10 Asset data

10.1 Power transformer

In the *CPXpert* power transformer interface, you can enter the transformer's nameplate data. Precise definition of the nameplate helps you in further automation of the testing process and ensures accurate reporting documentation.

Note: Fields marked with * are only visible in the expanded view for configuration.

- ▶ Click the ▪▪▪ button to open the expanded view.
- ▶ Click anywhere outside the expanded tile to return to the previous view.

  Note: Click the ▪▪▪ button in the **Tap changer** tile again to exit the expanded view.

10.1.1 Transformer – General

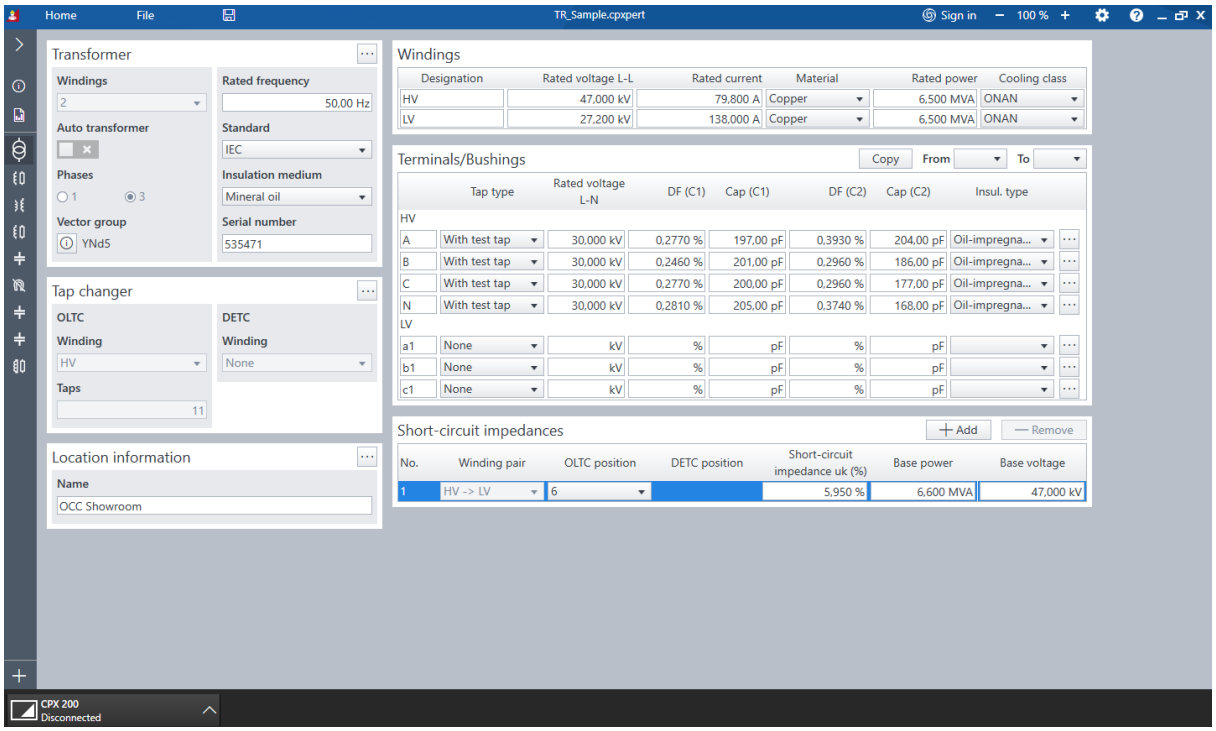

Figure 10-1: **Power transformer** asset view in *CPXpert*

Field	Description
Windings	Specifies the number of windings in the power transformer. By default, a two-winding transformer is selected. **Note:** When the number of windings is changed, update the vector group accordingly.
Auto transformer	Classifies the transformer as an auto transformer. **Note:** When the number of windings is changed, update the vector group accordingly.

Field	Description
Phases	Defines the transformer as a single-phase or three-phase transformer.
Vector group	Defines the vector group of the tested power transformer.
Rated frequency	Frequency specified by the asset manufacturer. By default, the rated frequency is set based on the value of **Default Rated Frequency** selected in the **General** tab of the *CPXpert* **Settings**.
Standard	Specific set of guidelines or specifications that the asset manufacturer adhered to during the production process of the asset.
Insulation medium	Primary insulation material used in the transformer. The interpretation of dissipation and power factor measurement results depends on the type of insulation medium used due to different electrical properties.
Serial number*	Unique number provided on the power transformer's nameplate. This number is crucial for identifying and tracking the asset.
Asset id*	Unique identifier assigned to the power transformer by the testing contractor or client. This ID is used to track and manage the power transformer throughout its life cycle.
Manufacturer*	Producer of the power transformer.
Type*	Classification of the power transformer as designated by the manufacturer.
Year*	Year in which the power transformer was manufactured.
Comment*	Comment field

* Only visible in the expanded view

10.1.2 Tap Changer

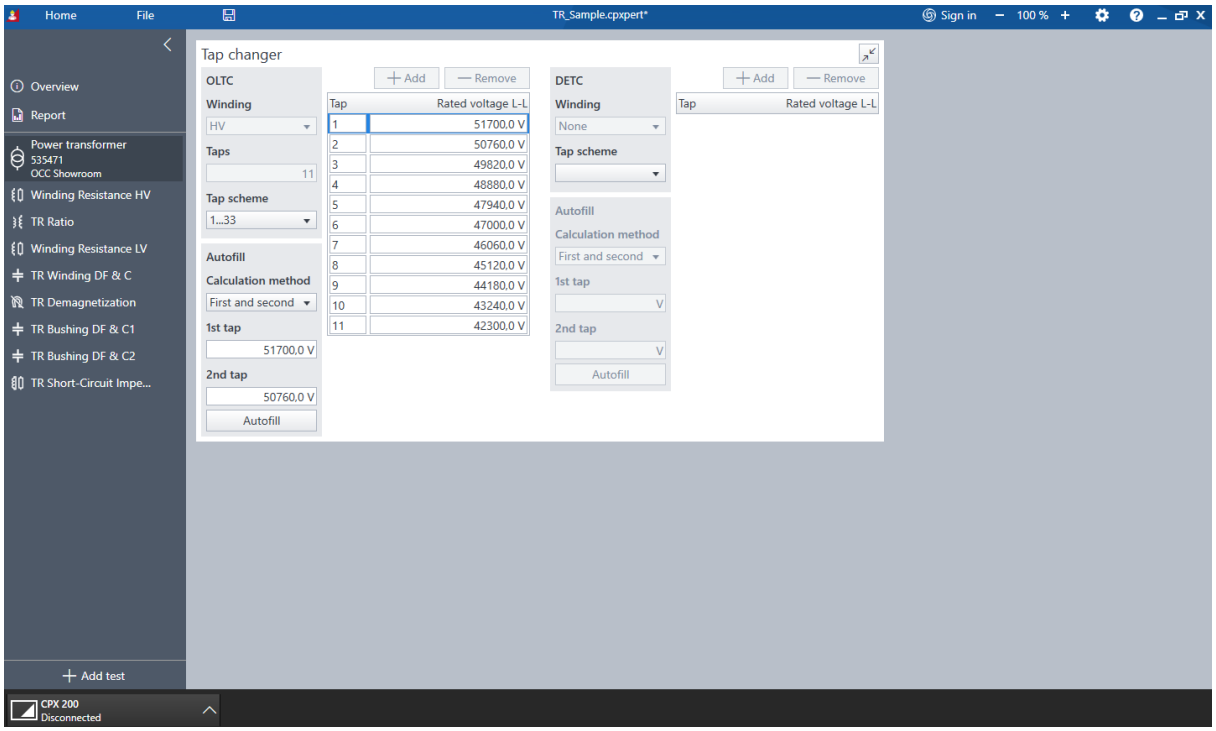

Figure 10-2: Expanded **Tap changer** tile of the power transformer asset data

In the **Tap changer** tile, you can configure the winding of OLTCs (on-load tap changers) and DETCs (de-energized tap changers).

If a transformer supports multiple rated line-to-line voltage (**Rated Voltage L-L**) specifications due to various cooling classes, select the definitions based on the cooling class in use.

If a tap changer has multiple middle positions, enter only 1 position. This is because the tap changer usually switches autonomously through the different middle positions with a single switching command.

Through the tap changer settings, the rated line-to-line voltages can be adjusted for each tap position. This applies to both the **OLTC** and the **DETC**.

Accurate rated line-to-line voltages for each tap changer position are essential for a valid transformer ratio assessment. If an input error occurs, the rated voltages can be adjusted even after the execution of the measurement. Any alteration in the rated line-to-line voltage per tap will automatically initiate a recalculation of the transformer ratio results.

Field	Description
Winding	Select the tap changer winding.
Taps	Select the number of switching positions.
Tap scheme*	Defines the label for each tap position.
Tap*	Tap label based on the selected tap scheme.
Rated voltage L-L*	Rated voltage for each winding tap position.

* Only visible in the expanded view.

The rated line-to-line voltages per tap position can either be entered manually or be calculated. The calculation methods are shown in the following table.

Calculation method	Description
First and second	The linear distance between the voltages of the first 2 taps will be applied to the other taps, based on the initial 2 voltage entries
Middle	The tap voltage will be calculated in ascending order, based on the middle tap (rated voltage) and the specified deviation in percentage. This means that the lowest tap number will have the lowest voltage, and the highest tap number will have the highest voltage.
First/Middle/Last	The linear voltage distance between the voltages of the first and middle taps will be applied to the other taps, based on the voltage entries of the first and middle taps.
1st tap	Voltage level of the first tap.
2nd tap	Voltage level of the second tap.

10.1.3 Windings

In the windings section, the shared properties for each winding are defined. **Rated Voltage L-L** and **Rated Current** correspond to the standard transformer rating, which is determined based on the middle position of the tap changer and the cooling class in use.

Field	Description
Designation	Specific name assigned to the winding. This designation name is interconnected with various other fields in *CPXpert* and will automatically update when altered. The default designation names are generated based on the standard settings.
Rated Voltage L-L	Rated voltage at the middle position of the tap changer in use.
Rated current	Rated current at the middle position of the tap changer in use. Takes into account the cooling method in use.
Material	The winding material determines the temperature correction factor that is applied when measurement results need adjustment to match a specified reference temperature. From the drop-down list, you can select **Copper** or **Aluminum**.
Rated power	Maximum apparent power a transformer winding can deliver under specified conditions. This is typically expressed in kilovolt-amperes (kVA) or megavolt-amperes (MVA). **Note:** If a power transformer winding has multiple rated powers, use the rated power assigned to the cooling class in use.

Field	Description
Cooling class	Power transformer cooling classes describe the methods used to dissipate heat generated during operation. Here are some common cooling classes: • **ONAN** (Oil Natural Air Natural): The transformer is cooled by natural convection of oil inside the tank and natural air circulation outside. This is a passive cooling method without any external fans or pumps. • **ONAF** (Oil Natural Air Forced): Similar to ONAN, but with additional fans to force air circulation around the transformer, enhancing the cooling effect. • **OFAN** (Oil Forced Air Natural): Oil is circulated through the transformer using pumps, while air cooling is achieved naturally without fans. • **OFAF** (Oil Forced Air Forced): Both oil and air are circulated using pumps and fans respectively, providing a more efficient cooling system.

10.1.4 Terminals/Bushings

Field	Description
Terminal	Specific name assigned to the winding terminal. This terminal name is interconnected with various other fields in *CPXpert* and will automatically update when altered. The default terminal names are generated based on the standard settings.
Tap type	The availability of a bushing tap type determines whether a Dissipation/Power Factor & Capacitance measurement can be performed. The primary distinction between a test tap and a potential tap lies in their designated voltage ratings. Typically, the test tap has a voltage rating of 500 V, while the potential tap has a rating of 2 kV. For dissipation/power factor measurements of bushing C2, the maximum test voltage should not surpass the nominal specifications of the bushing tap.
Rated voltage L-N	Standard voltage specification of the bushing. When using the bushing copy function, extra caution is advised as neutral bushings often have a different **Rated voltage L-N** specification.
DF (C1)	Reference values for C1. Comparing these values with the reference standards can be beneficial for evaluating the health of the system.
Cap (C1)	Reference values for C1. Comparing these values with the reference standards can be beneficial for evaluating the health of the system.
DF (C2)	Reference values for C2. Comparing these values with the reference standards can be beneficial for evaluating the health of the system.
Cap (C2)	Reference values for C2. Comparing these values with the reference standards can be beneficial for evaluating the health of the system.
Insul. type	The type of bushing insulation is a crucial factor when analyzing measurement results. Depending on the type of bushing insulation, different criteria for dissipation/power factors may be applied

10.1.5 Short-circuit Impedances

Short-circuit impedance limits the current flow during a short-circuit fault and is essential for the parallel operation of transformers. An appropriate value is necessary to keep the fault current manageable for protection devices and breakers.

Field	Designation
No.	The number designates the specified short-circuit impedance of a power transformer, based on the winding pair and the positions of the On-Load Tap Changer (OLTC) and De-Energized Tap Changer (DETC). Click **+ Add** to enter a new specification or **– Remove** to delete the current entry.
Winding pair	Specifies between which 2 power transformer windings the short-circuit impedance definition is valid.
OLTC position	Indicates the specific on-load tap changer setting for which the short-circuit impedance definition is valid.
DETC position	Indicates the specific de-energized tap changer setting for which the short-circuit impedance definition is valid.
Short-circuit impedance uk (%)	Short-circuit impedance of the transformer.
Base power	Used for calculating the percentage values of impedances. Typically, the base power is identical to the rated power of the first non-short-circuited winding under test. However, it can be adjusted to standardize calculations, even if it differs from the rated power of some transformers in the system.
Base voltage	Used for calculating the percentage values of impedances. Typically, the base voltage is identical to the rated voltage of the first non-short-circuited winding under test. However, it can be adjusted to standardize calculations, even if it differs from the rated voltage of some transformers in the system.

10.2 Current transformer

There are 2 options for the **Asset type**:

- **Conventional**: inductive current transformers
- **LPCT**: low-power current transformers

Depending on the type of the current transformer under test, you have different tabs for the asset data.

To choose the type of current transformer:

1. Click the drop-down triangle under **Asset type**.
2. Choose **Conventional** or **LPCT** from the list.

➡ You will see the corresponding tabs for the CT setup.

10.2.1 Conventional current transformer

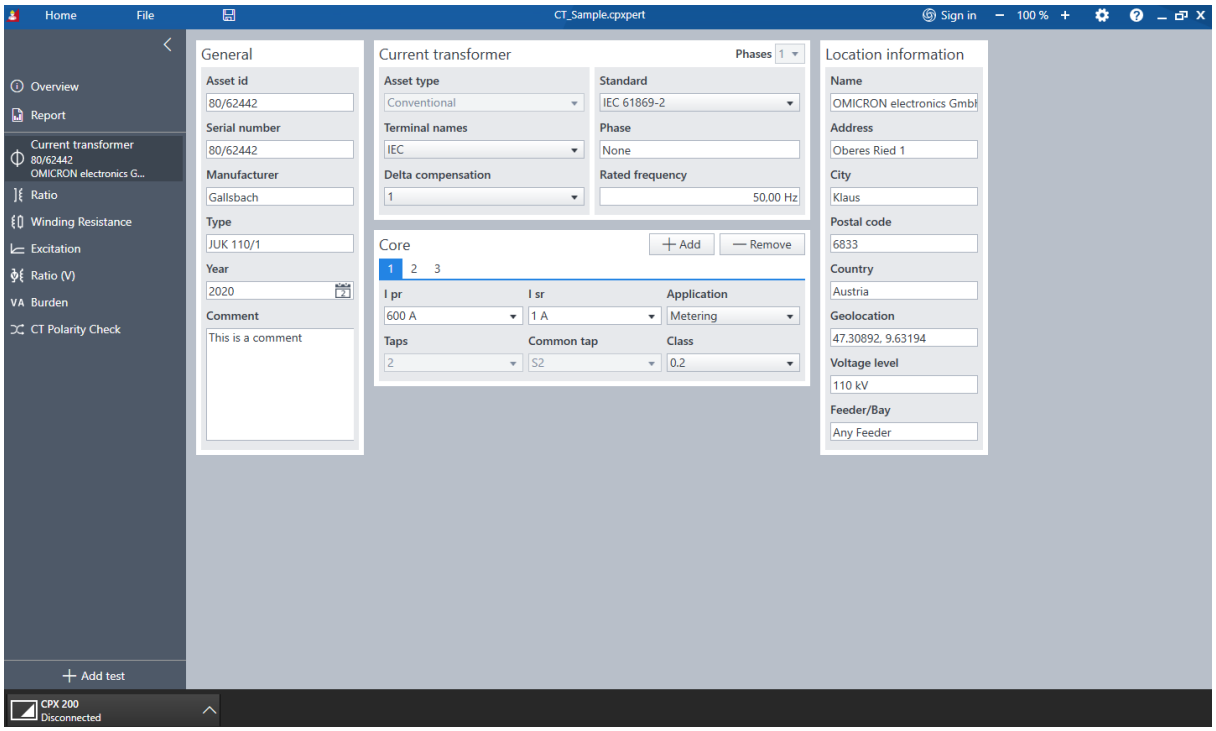

Figure 10-3: Conventional **Current trasformer** asset view in *CPXpert*

Field	Description
Asset type: **Conventional**	Type of current transformer. Automatically set based on the first test added to the test list.
Terminal names	Names given to the primary and secondary terminals of the current transformer. The default terminal names are generated based on the standard settings. The terminal names are interconnected with various other fields in *CPXpert*, and they will update automatically with any change in the related fields.
Delta compensation	Factor used in a delta configuration when testing bushing current transformers. It calculates the voltage ratio between the primary terminals of the current transformer and the transformer terminals, so that the voltage distribution is accurately represented in the measurement setup.
Standard	Specific set of guidelines or specifications that the asset manufacturer adhered to throughout the process of producing the asset.
Phases	Indicates the location of the current transformer installation. The 2 primary terminals can be connected either between 1 phase and ground, or between 2 phases.

Field	Description
Rated frequency	Frequency specified by the asset manufacturer. Set to the **Default Rated Frequency** value selected in the **General** tab of the *CPXpert* **Settings** by default.

10.2.1.1 Three-Phase Current Transformer

CPXpert supports testing of current transformers one at a time, or 3 in a group.

1. Select the number of phases:
   1.1 In the **Current Transformer** tile, click the drop-down triangle for **Phases** and choose the number:
   - **1** for a stand-alone current transformer.
   - **3** for a 3-phase current transformer.
2. Enter the serial numbers.
3. Depending on the selected number of phases, enter in the **General** tile
   - one serial number for a 1-phase transformer.
   - three serial numbers for a 3-phase transformer.

A three-phase current transformer can be selected, only when all the three transformers have the same parameters on the nameplate, except for the serial numbers and asset IDs. This is typically used when testing a group of current transformers in feeder testing. This selection also allows you to choose Phase A, B, or C for each supported current transformer test, enabling direct core-by-core comparison within an individual test.

10.2.1.2 Core

In the **Core** section, there are at maximum 9 different current transformer cores.

Field	Description
I pr	**I pr** is the rated primary current of the current transformer. For current transformers with multiple primary winding configurations, enter the rated primary current for the selected winding configuration in use.
I sr	**I sr** is the secondary current of the current transformer.
Application	**Application** includes 2 options for the designed purposes of the current transformer core: **Metering**, or **Protection**.
Taps	The number of taps indicates whether the current transformer core has tapped secondary windings. If the number of taps is more than 2, the transformation ratio for other main taps and inter tap combinations can be additionally specified.
Common tap	**Common tap** indicates which secondary winding tap is connected to ground during operation. The common tap selection also defines the tap combinations for the main and inter taps for tapped secondary windings.

Field	Description
Class	**Class** indicates the rated accuracy class of the current transformer core. The class applies to the full tap combination, unless stated otherwise.

10.2.1.3 Main taps and Inter taps

The sections **Main taps** and **Inter taps** appear only when the selected core has more than 2 secondary winding taps. Main taps are all the valid tap combinations from the inner taps to the common tap, whereas the rest are inter taps.

Note: The **I pr** values entered must be smaller than the **I pr** value in the **Core** section for the full-tap combination, to accurately define the correct turns ratio distribution for the other tap combinations.

10.2.2 Low-power current transformer (LPCT)

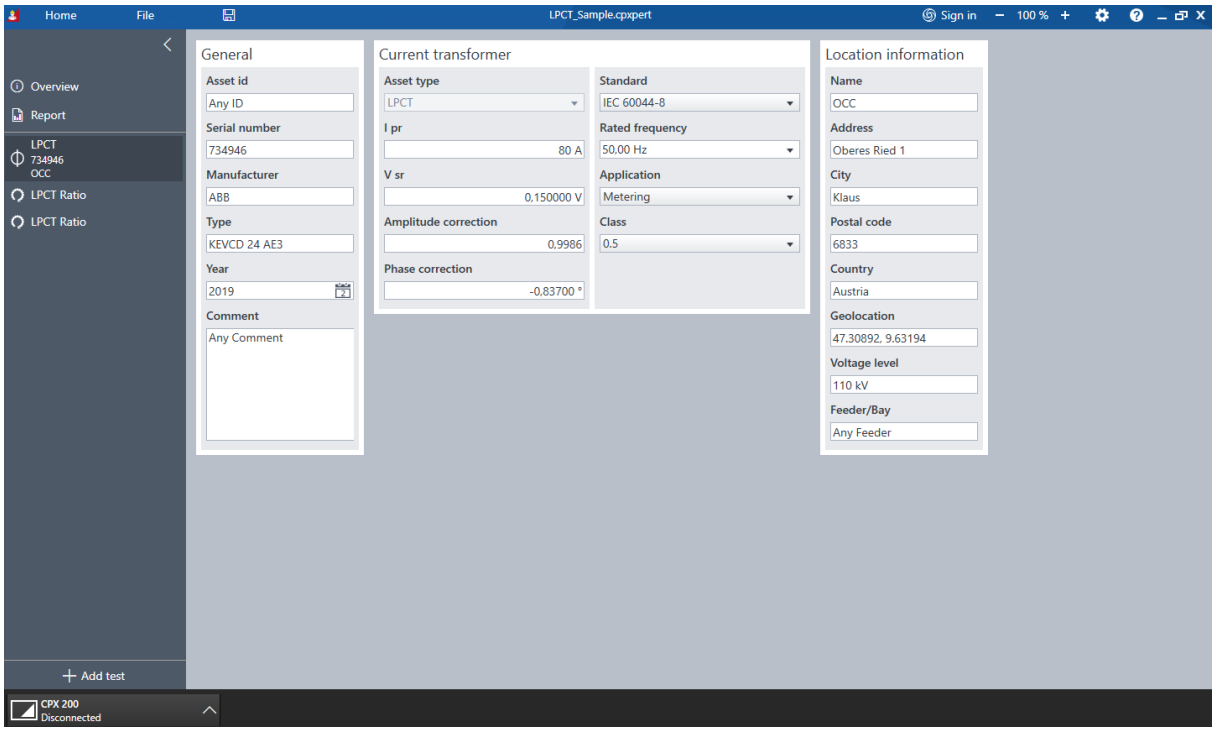

Figure 10-4: **LPCT** asset view in *CPXpert*

Field	Description
Asset type: **Low power CT**	Used for more precise categorization of the current transformer. The asset type is automatically set based on the first test added to the **Test list**.
I pr	Rated primary current of the current transformer. For current transformers with multiple primary winding configurations, enter the rated primary current for the selected winding configuration in use.
V sr	Rated secondary voltage of the low-power current transformer.

Field	Description
Amplitude correction	Applied to adjust the determined transformation ratio. The amplitude correction factor is typically indicated on the nameplate of the test object.
Phase correction	Applied to adjust the determined transformation ratio phase error. The phase correction factor is typically indicated on the nameplate of the test object.
Standard	Specific set of guidelines or specifications that the asset manufacturer adhered to throughout the process of producing the asset.
Rated frequency	Frequency specified by the asset manufacturer. Set to the **Default Rated Frequency** value selected in the **General** tab of the *CPXpert* **Settings**.
Application	Provides 2 options for the designed purpose of the current transformer core: **Metering** and **Protection**.
Class	Indicates the rated accuracy class of current transformer core. The class applies to the full tap combination, unless stated otherwise.

10.3 Voltage transformer

10.3.1 Voltage Transformer – General

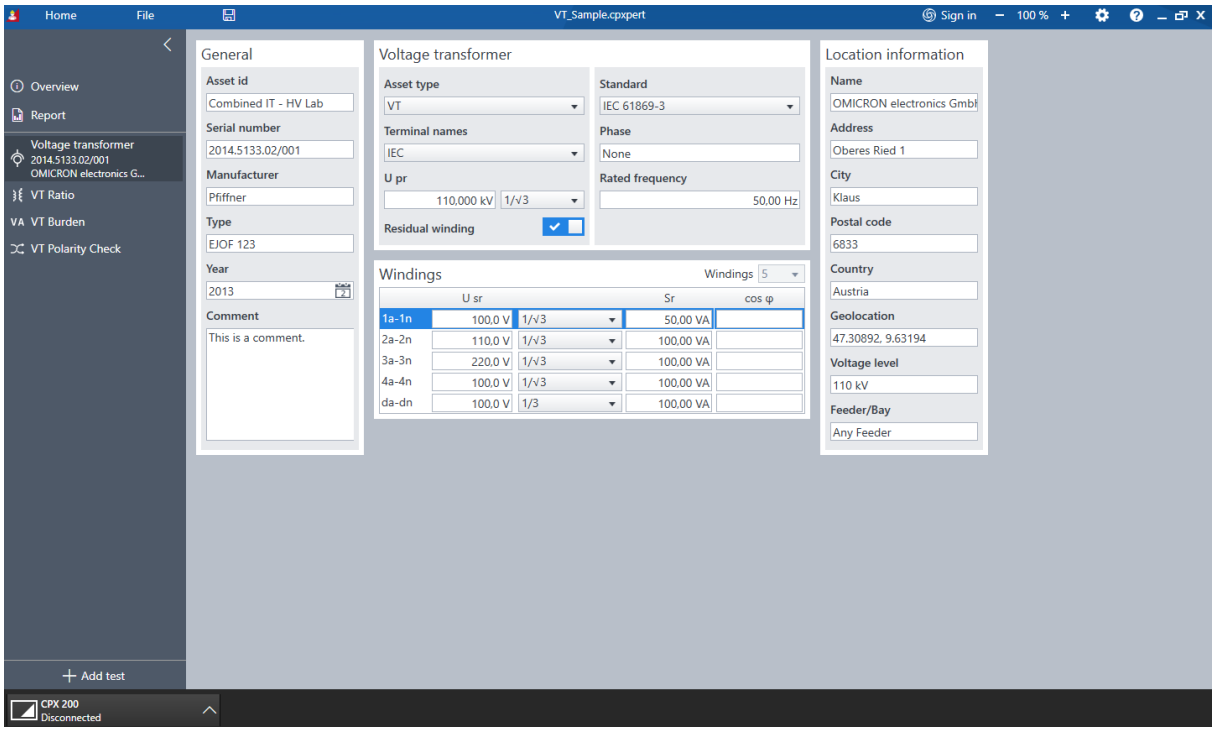

Figure 10-5: **Voltage transformer** asset view in *CPXpert*

Field	Description
Asset type	Type of voltage transformer.
Terminal names	**Options:** • **IEC** • **IEEE** Specific name assigned to the primary and secondary terminals of the voltage transformer. The terminal names are interconnected with various other fields in *CPXpert* and will automatically update when altered. The default terminal names are generated based on the standard settings.
U pr	Rated primary voltage of the voltage transformer.
Multiplier	Used to define whether the voltage transformer is a line-to-line or line-to-ground voltage transformer: • 1/√3 = line-to-ground voltage transformer • 1/1 = line-to-line voltage transformer

Field	Description
Residual winding	**Options:** • **Off** (default) • **On** When the residual winding option is selected, the last voltage transformer winding is designated as the residual winding. A residual winding in voltage transformers is used to measure the residual voltage in a three-phase system during a single-phase fault. For standard testing purposes, the residual winding should be disconnected from the other interconnected voltage transformers.
Standard	Specific set of guidelines or specifications that the asset manufacturer adhered to during the production process of the asset. The standard influences the default selection for the U sr voltage.
Phase	Indicates the location of the voltage transformer installation. The 2 primary terminals can be connected either between one phase and ground or between 2 phases. A line-to-line VT needs 2 insulated bushing terminals, but a phase to ground VT needs only 1 bushing, because one of the 2 poles is already at ground potential. The voltage between pole A and N is the phase-ground voltage, which is always √3 times smaller than the voltage of a line-to-line VT with the same rated voltage.
Rated frequency	Frequency specified by the asset manufacturer. By default, the rated frequency is set based on the value of **Default Rated Frequency** selected in the **General** tab of the *CPXpert* **Settings**.

10.3.2 Windings

Field	Description
Windings	Up to 5 windings can be selected.
U sr	Rated secondary voltage of the voltage transformer winding. The default values are 100 V for any selected IEC standard and 115 V for any selected IEEE standard.
Multiplier	The U sr multiplier selection is used to define the voltage transformer secondary winding application. • **1/√3** = phase-ground winding • **1/3** = residual winding • **1/1** = phase-phase winding
Sr	**Note:** Rated output burden based on the voltage transformer nameplate. The operating burden of the voltage transformer may vary.
cos φ	Lagging power factor of the rated secondary output in the voltage transformer.

10.4 Switchgear

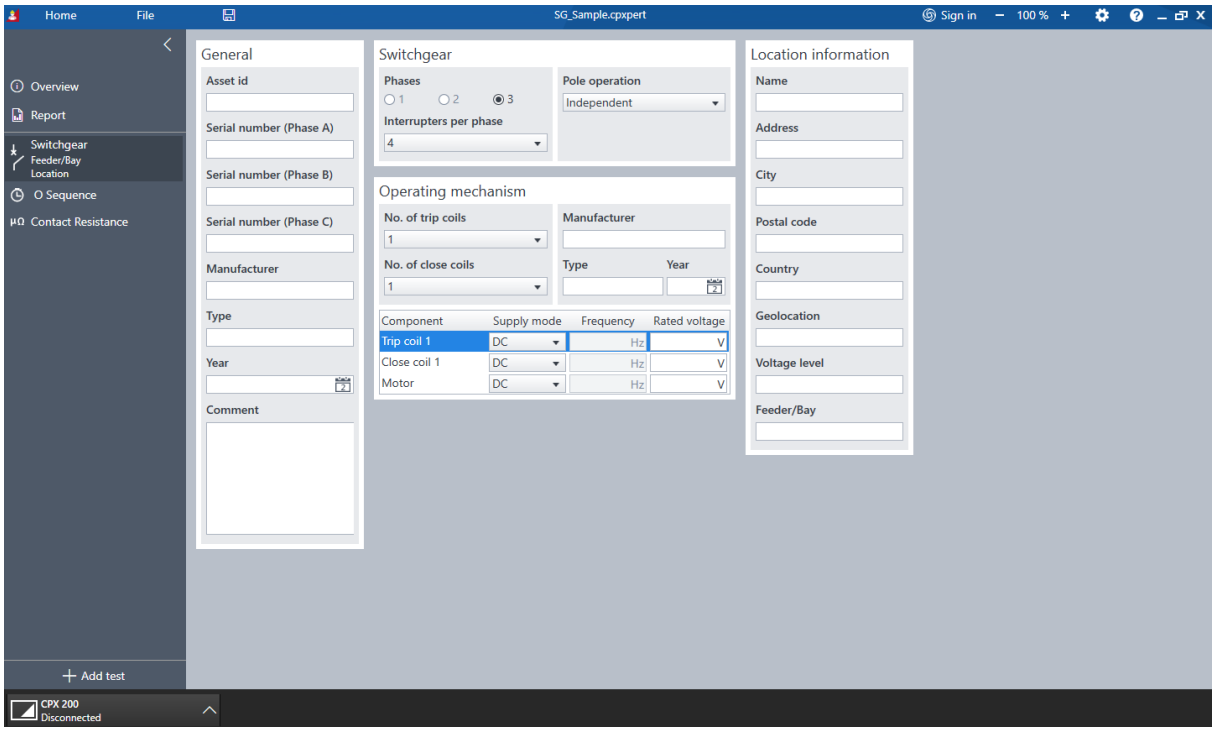

Figure 10-6: **Switchgear** asset view in *CPXpert*

10.4.1 Switchgear – General

The settings stated within the **Switchgear** view are applicable for all phases.

Field	Description
Phases	Defines the switchgear as a single-phase, two-phase or three-phase switchgear.
Interrupters per phase	A switchgear may be equipped with 1 or multiple interrupters for each phase. If a phase has more than 1 interrupter installed, it is possible to conduct tests either collectively on all interrupters, or on individual interrupter components.
Pole operation	Determines whether all phases are mechanically interconnected through ganged pole operation, or each phase operates independently with its own pole mechanism. **Note:** When independent pole operation is chosen, unique serial numbers can be assigned to each phase in the general section.

10.4.2 Operating mechanism

The settings outlined in the **Operating mechanism** view apply to all phases and only need to be configured once. Each phase requires its own set of trip or close coils.

Field	Description
No. of trip coils	Number of trip coils assigned to each phase. If there is more than one trip coils per phase, the operating circuit is likely equipped with backup trip coils, each potentially having a distinct rating. We recommend executing measurements, such as **Timing**, for every possible trip coil configuration.
No. of close coils	Number of close coils assigned to each phase. If there is more than one close coil per phase, the operating circuit is likely equipped with backup close coils, each potentially having a distinct rating. We recommend executing measurements, such as **Timing**, for every possible close coil configuration. If the close coils can only be operated mechanically, the number of close coils can be configured to 0.
Manufacturer	Manufacturer of the operating mechanism component.
Type	Type of operating mechanism component as designated by the manufacturer.
Year	Year in which the operating mechanism component was manufactured.

Besides the general configuration of the operating mechanism, there is more specific setup of components, supply mode, frequency, and rated voltage.

Field	Description
Component	Available components of the trip, close, and motor operating mechanism.
Supply mode	Defines whether the individual operating mechanism component needs to be supplied with AC or DC voltage.
Frequency	AC operation frequency of the operating mechanism.
Rated voltage	Rated voltage of the component for the operating mechanism.

10.5 Location information

Setting the geolocation

You can change the geolocation information for tested assets in the **Location information** tile in *CPXpert*.

Click the ... button to access the full **Location information** tile for power transformers.

The system is designed to display and store longitude and latitude coordinates in the decimal degree (D.D°) format.

While the displayed format and storage is decimal degrees, *CPXpert* also accommodates input in alternative geolocation formats.

- Degrees Minutes Seconds (D° M’ S") Format: a traditional format that divides each degree into 60 minutes and each minute into 60 seconds.
- Degrees and Decimal Minutes (D° M.M’) Format: a hybrid format that includes degrees and minutes, with the minutes expressed as a decimal.

Geolocation formats are only converted automatically within *CPXpert* if the information is copied and pasted via the Windows clipboard feature. To activate automatic conversion, press **Ctrl** + **F** after copying the geolocation data.

Table 10-1: Overview of supported geolocation input formats via the Windows clipboard

Format	Example
Decimal degree (D.D°)	40.44612, -79.98222
Degrees Minutes Seconds (D° M’ S")	40° 26′ 46″ N 79° 58′ 56″ W
Degrees and Decimal Minutes (D° M.M’)	40° 26.767′ N 79° 58.933′ W

11 Universal tests

11.1 Quick



The **Quick** test enables manual control over the *CPX 200* and the *HVX10*'s outputs and inputs, providing a hands-on approach for experienced operators. It is important to note that the **Quick** test does not incorporate wiring diagrams or dedicated workflows tailored to specific applications. Operators must exercise due diligence in ensuring the correct setup and configuration of the available output and input options to achieve the desired results safely and effectively.

⚠ DANGER

Death or severe injury caused by high voltage or current

▶ Ensure that test-specific procedures are fully understood before wiring and operating the *CPX 200* in the manual **Quick** mode.

Quick is a multifunctional software module designed for various purposes. However, if a dedicated software module exists for a specific application, **Quick** should not be used for that application. Dedicated software modules provide output pre-selection, customized wiring diagrams, workflows, limiters, and wiring checks to support fast, comprehensive, and safe testing.

For more information related to the **Quick** test, refer to the following sections:

- Safety (page 13)
- CPX 200 safety functions and components (page 20)
- HVX10 safety functions and components (page 36)
- Wiring and operation (page 84)
- Transportation of the CPX 200 and the HVX10 (page 39)

11.1.1 Outputs

The **Quick** output configuration offers a comprehensive suite of options for advanced test scenarios. Below is an overview of the available settings:

- **Signal mode**: Select between **AC** (Alternating Current) and **DC** (Direct Current) for the signal frequency. For AC signals, each output can be adjusted from 1 Hz to 599 Hz.
- **Test frequency**: Set the specific frequency value for each measurement point. The frequency used at each point is displayed by the selected frequency measurement channel per output.
- **Output mode**: Choose whether to inject current or voltage values into the system.
- **Max. voltage/current**: Determine the highest amplitude value that can be assigned per output during a test. By default, this is preset to the upper limit of the output's capacity.
- **Slope**: Control the rate at which the amplitude reaches the desired target value, defining the ramp-up speed.

Quick's outputs are versatile, supporting multiple output ranges. To attain the utmost measurement accuracy, it is essential to select an output range that corresponds to the maximum amplitude required for testing.

Table 11-1: Overview of all available output ranges within **Quick**

Output	Output mode	Signal mode	Output range	Output regulation range
OUT A	Voltage	**AC**	0 … 42 V	0 … 32 A
			0 … 85 V	0 … 16 A
		DC	0 … 60 V	0 … 32 A
			0 … 120 V	0 … 20 A
	Current	**AC**	0 … 8 A	0 … 85 V
			0 … 35 A	0 … 85 V
			0 … 70 A	0 … 42 V
		DC	0 … 12 A	0 … 120 V
			0 … 50 A	0 … 120 V
			0 … 100 A	0 … 60 V
OUT B	Voltage (Single-phase)	**AC**	0 … 300 V	0 … 300 mA
	Voltage (Three-phase)		0 … 150 V	0 … 300 mA
	Voltage (Single-phase)	**DC**	0 … 300 V	0 … 300 mA
HC OUT	Current 100 A output	**DC**	0 … 100 A	0 … 16 V
	Current 1000 A output	**AC**	0 … 1000 A	0 … 5 V
		DC	0 … 1000 A	0 … 5 V
HV OUT	Voltage	**AC**	0 … 10 kV	0 … 200 mA
		DC	0 … 10 kV	0 … 3 mA

11.1.1.1 Dual output utilization

The *CPX 200* offers the capability to simultaneously utilize 2 outputs from **OUT A**, **OUT B**, **HC OUT**, and **HV OUT** in various combinations, which can facilitate specialized measurements using the **Quick** card, such as basic protection testing. When utilizing 2 outputs simultaneously, it is imperative to carefully monitor both the test setup and the amplitude values being injected.

⚠ DANGER

Death or severe injury caused by high voltage or current

▶ Do not connect any output of the *CPX 200* or the *HVX10* to any external sources.

⚠ WARNING

Death or severe injury caused by high voltage or current possible

Exceeding the supported output range by infusing excessive current or voltage can cause irreversible damage to the outputs. Such overloading may lead to malfunctions.

▶ Always verify that the input values are within the safe operational limits of the output range.

⚠ WARNING

Death or severe injury caused by high voltage or current possible

▶ Do not connect multiple outputs to the test object in parallel.

11.1.1.2 Temperature monitoring

The *CPX 200* and the *HVX10* are equipped with real-time temperature supervision to maintain optimal operating conditions. If the temperature of any device in use deviates from the acceptable range, the system will prevent any injection procedures to protect the integrity of the device.

▶ Cool down or warm up the device, as necessary, to return to the safe temperature range before resuming operation.

Symbol	Reason
	One or more devices are **very hot**, and the temperature is increasing, stable, or decreasing.
	One or more devices are **hot**, and the temperature is increasing, stable, or decreasing.
	Devices are operated in **very cold** conditions < -10 °C (14 °F).
	One or more devices are **overheated**, and no injection is currently possible.

11.1.2 Inputs

Either the measurement inputs associated with the outputs, or the dedicated inputs can be utilized as their input sources.

Integrated inputs are directly available once an output has been selected. The corresponding inputs need to be selected manually.

Dedicated inputs

When configuring dedicated inputs on the *CPX 200* and the *HVX10*, it is crucial to select the correct signal mode.

⚠ WARNING

Death or severe injury caused by high voltage or current possible

Exceeding the supported input range by infusing excessive current or voltage can cause irreversible damage to the inputs. Such overloading may lead to malfunctions.

▶ Always verify that the input values are within the safe operational limits of the input range.

Input	Type	Signal mode	Input range
V IN1	Voltage	**AC** and **DC**	0 … 300 V
V IN2			0 … 300 V
I IN1	Current		0 … 12 A
I IN2			0 … 12 A
V IN1 - Current clamp	Voltage	**AC**	0 … 300 V
V IN2 - Current clamp	Voltage		0 … 300 V

A current clamp can be affixed to the **V IN1** and **V IN2** inputs. Once activated, the specified clamp ratio is factored into the voltage measurements at these inputs. This adjustment allows for the correlation of the measured voltage with the primary current value selected for the test.

Integrated inputs

The range and signal mode of integrated inputs are automatically configured based on the selected output mode.

Input	Type	Available via
OUT A - V	Voltage	**OUT A**
OUT A - I	Current	
OUT B1 - V	Voltage (1 × phase)	**OUT B**
OUT B2 - V		
OUT B3 - V		
OUT B123 - V		
OUT B123 - LN - V	Voltage (3 × phase)	
OUT B123 - LL - V		
OUT B1 - I	Current (1 × phase)	
OUT B2 - I		
OUT B3 - I		
OUT B123 - I		
OUT B123 - LN - I	Current (3 × phase)	
OUT B123 - LL - I		
HC OUT - V	Voltage	**HC OUT**
HC OUT - I	Current	
HV OUT - V	Voltage	**HV OUT**
HVX OUT - V IN		
HV OUT - I	Current	
HVX - I IN		
OUT A - f	Frequency	**OUT A**
OUT B - f	Frequency	**OUT B**
HC OUT - f	Frequency	**HC OUT**
HV OUT - f	Frequency	**HV OUT**

When **HVX – I IN** is used as input mode, the corresponding measurement mode needs to be selected as described in Measurement modes (page 116).

11.1.2.1 Frequency-selective measurement

In a **Quick** test, the **Frequency-selective measurement** feature provides 2 modes to sample and analyze the frequency components in the input signal:

- Selecting the signal components at or closely around the specified reference frequency, when **Frequency-selective** is enabled.

  This feature facilitates focused analysis of the desired frequency by effectively filtering out other frequency components like noise and harmonics.
- Covering all frequency components, when **Frequency-selective** is disabled.

  This provides a broadband analysis of the signal, capturing the total supported frequency spectrum.

To enable **Frequency-selective measurement**:

▶ Click the toggle button to enable the feature.

▶ Specify the reference frequency.

To disable **Frequency-selective measurement**:

▶ Click the toggle button to disable the feature.

The **Frequency-selective measurement** can be independently set for each measurement point. The configuration is possible before or during the measurement. The selected **Frequency-selective** setting and the configured **Reference frequency** are automatically recorded for each measurement point.

For purely sinusoidal signals, measurement readings are similar whether or not the **Frequency-selective measurement** is enabled.
However, for non-sinusoidal signals, such as signals distorted by saturation, measurement readings differ since the frequency-selective mode ignores harmonics in the signal.

11.1.3 Trigger settings

A trigger option refers to a specific condition or event that initiates a predefined action or sequence of actions. With the *CPX 200*, the most common application is to stop the measurement sequence. Upon the occurrence of a trigger event set to terminate the measurement, the outputs of both the *CPX 200* and *HVX10* will be deactivated instantly. Concurrently, the measurement data is captured and displayed, reflecting the precise values at the moment the trigger event took place.

The *CPX 200* **Quick** test offers the following trigger options:

- **Overload**

  The **Overload** trigger can be used with any output and will be triggered when the set output regulation range is exceeded or running in an overload condition.

- **Binary**

  Available for **BIN OUT** and **BIN - IN**, this trigger responds to changes in the open/close status of the selected binary inputs.

- **Higher than**

  Available for all measurement inputs, including integrated inputs. It triggers when the input value surpasses the specified threshold.

- **Lower than**

  Similar to the **Higher Than** trigger, this option is also usable for all measurement inputs. It activates when the input value drops below the designated threshold.

The following general trigger settings are available for the trigger’s options:

- **Trigger delay**

  This setting establishes a grace period at the start of a measurement sequence during which any triggers are disregarded, preventing premature termination of the measurement.

- **Timeout**

  Defines the maximum duration for a measurement. If no trigger event occurs within this time frame, the measurement will automatically stop.

- **Switch off on trigger**

  This option gives you the choice to either halt the measurement or log the state change and proceed to the subsequent state upon triggering.

11.1.3.1 Binary trigger settings

When a **Binary** trigger is selected, there will be 2 signal filters:

- **Debounce**
- **Deglitch**

Debouncing binary input signals

For input signals with a bouncing characteristic, a debounce function can be configured. This means that the first change of the input signal causes the debounced input signal to be changed and then to be kept stable for the debounce time.

The debounce function is placed after the deglitch function described below. Both functions are calculated in real time.

The figure below illustrates the debounce function. On the right-hand side of the figure, the debounce time is too short. As a result, the debounced signal rises to "high" once again, even while the input signal is still bouncing and does not drop to low level until the expiry of another period $T_{debounce}$.

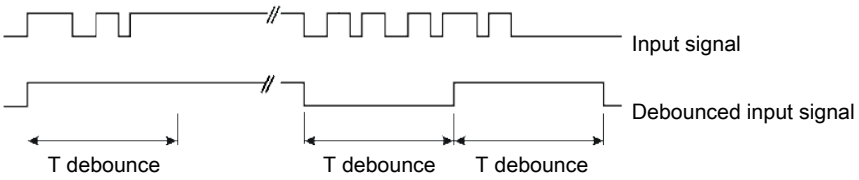

Deglitching binary input signals

To suppress short spurious pulses, a deglitching algorithm can be configured. The deglitch process results in an additional dead time and introduces a signal delay. To be detected as a valid signal level, the level of an input signal must be stable for the deglitch time. The figure below illustrates the deglitch function.

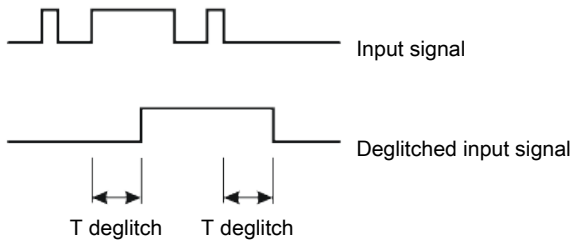

11.1.4 Calculation options

When you configure 2 inputs within the measurement table, a suite of calculation options becomes available. These options allow for advanced data analysis and processing, tailored to the specific inputs you have set up.

Symbol	Calculation value 1	Calculation value 2	Input combination
	**Impedance absolute** Z abs in Ω	**Impedance phase** Z phase in °	1 × Voltage AC & 1 × Current AC
	**Resistance** R in Ω	**Reactance** X in Ω	1 × Voltage AC & 1 × Current AC
	**Series Resistance** Rs in Ω	**Series inductance** Ls in H	1 × Voltage AC & 1 × Current AC
	**Parallel Resistance** Rp in Ω	**Parallel Capacitance** Cp in F	1 × Voltage AC & 1 × Current AC
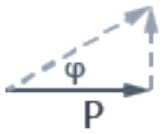	**Real power** P in W	**Power factor** cos φ in °	1 × Voltage AC & 1 × Current AC
	**Reactive power** Q in var	**Power factor** cos φ in °	1 × Voltage AC & 1 × Current AC

Symbol	Calculation value 1	Calculation value 2	Input combination
	**Apparent power** S in VA	**Power factor** cos φ in °	1 × Voltage AC & 1 × Current AC
	**Resistance** R in Ω		1 × Voltage DC & 1 × Current DC
P	**Real power** P in W		1 × Voltage DC & 1 × Current DC
: 1	**Ratio to 1** Channel 1 / Channel 2	**Phase angle** φ in °	2 × Voltage AC or 2 × Voltage DC or 2 × Current AC or 2 × Current DC
: 5	**Ratio to 5** 5 * Ratio to 1	**Phase angle** φ in °	2 × Voltage AC or 2 × Voltage DC or 2 × Current AC or 2 × Current DC
Δ	**Delta ratio** Channel 1– Channel 2 in A or V	**Delta phase angle** $\varphi_{Channel\ 1}$- $\varphi_{Channel\ 2}$ in °	2 × Voltage AC or 2 × Voltage DC or 2 × Current AC or 2 × Current DC

11.2 C/Tan Delta



The **C/Tan Delta** measurement is an established and important insulation diagnosis method. It measures the sum of all losses in an insulation, influenced for example by:

- Insulation failures
- Aging of insulation
- Contamination of insulation liquids with particles
- Water in solid and liquid insulation
- Partial discharges

The measurement can be performed using the *CPX 200* and the *HVX10*.

Before setting the *CPX 200* and the *HVX10* into operation and carrying out a test, make sure that you have read and understood the following sections:

- Safety (page 13)
- CPX 200 safety functions and components (page 20)
- HVX10 safety functions and components (page 36)
- Wiring and operation (page 84)
- Connecting the HVX10 to the CPX 200 (page 37)
- Support (page 280)

⚠ DANGER

Death or severe injury caused by high voltage or current

- ▶ Never use the *HVX10* without a solid connection to ground with at least 6 mm^2.
- ▶ Use a ground point as close as possible to the test object.
- ▶ Make sure to position the test object in the danger zone with appropriate distance to the work area.

⚠ DANGER

Death or severe injury caused by high voltage or current

The high-voltage cable is shielded and therefore safe. However, the 50 cm (20 in) of this cable highlighted in yellow have no shield.

- ▶ Avoid any direct contact of this part of the cable to ground potential and any objects.
- ▶ During a test, consider this part of the cable a live wire and life threatening.

C/Tan Delta is a multifunctional software module designed for various purposes. However, if a dedicated software module exists for a specific application such as power transformer winding and bushing C1 or C2 dissipation and power factor tests, **C/Tan Delta** should not be used for that application. Dedicated software modules provide output pre-selection, customized wiring diagrams, workflows, limiters, and wiring checks to support fast, comprehensive, and safe testing.

For more asset-specific guidance, refer to the following sections:

- TR Winding DF/PF & C (page 179)
- TR Bushing DF/PF & C1 (page 190)
- TR Bushing DF/PF & C2 (page 198)

11.2.1 Theory

It is essential to determine the quality of the insulation of high-voltage assets during manufacturing, commissioning, and during its service life.

Transformers, bushings or high-voltage switchgear are made of conductive and insulating materials forming insulation capacitances. In an ideal capacitor without any dielectric losses, the insulation current is exactly 90° leading according to the applied voltage. For a real insulation with dielectric losses this angle is less than 90°. The angle δ = 90° - φ is called loss angle.

In a simplified circuit diagram of a real insulation, **C** represents the loss-free capacitance and **R** the losses.

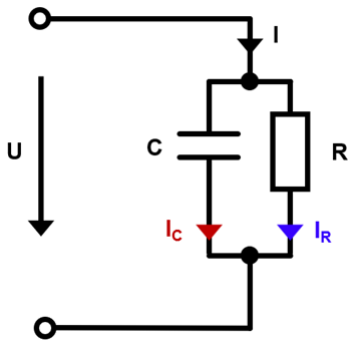

Figure 11-1: Simplified circuit diagram of an insulation

If a test voltage **U** is applied, the resulting test current I can be separated into the capacitive component I_C, and resistive component I_R. While I_R is in phase with the applied voltage, I_C is leading by 90°.

The losses of this simplified insulation can be quantified by 2 related metrics, the **Dissipation Factor (DF)** and the **Power Factor (PF)**.

The **Dissipation Factor** is denoted as **DF = tan δ**, where **δ** is the loss angle, representing the phase difference between the resistive and capacitive components of the test current.

On the other hand, the **Power Factor** is expressed as **PF = cos φ**, with **φ** being the phase angle between the voltage and the test current.

The vector diagram and the definition of tan δ and cos φ are shown in the following figure.

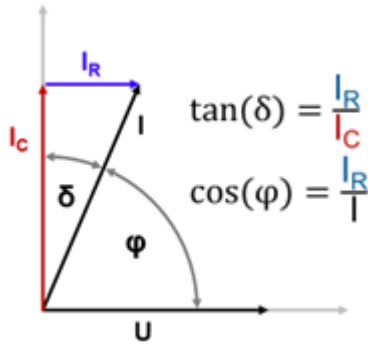

Figure 11-2: The vector diagram and the definition of tan δ and cos φ

The dielectric losses in the insulation are caused by polarization and conduction phenomena. The different polarization mechanisms are caused by various physical processes.

11.2.2 Test setup

The **C/Tan Delta** test is universally applicable and adaptable to various measurement configurations. The generalized wiring diagram will indicate which inputs are actively measuring and which are designated to bypass any measurement currents based on the selected measurement mode.

Important Considerations:

- It is not mandatory to connect all 4 measurement inputs.
- When setting up a measurement input for guarding - indicated by a grey capacitance symbol - it is not always required to establish a wiring from the corresponding *HVX10* input to the test object. The measurement guard input should only be connected in scenarios where it is essential to actively bypass unwanted measurement currents.
  For example: In case of overall power transformer and C1 measurements, there may be specific conditions where additional guarding on the bushing surface is necessary.

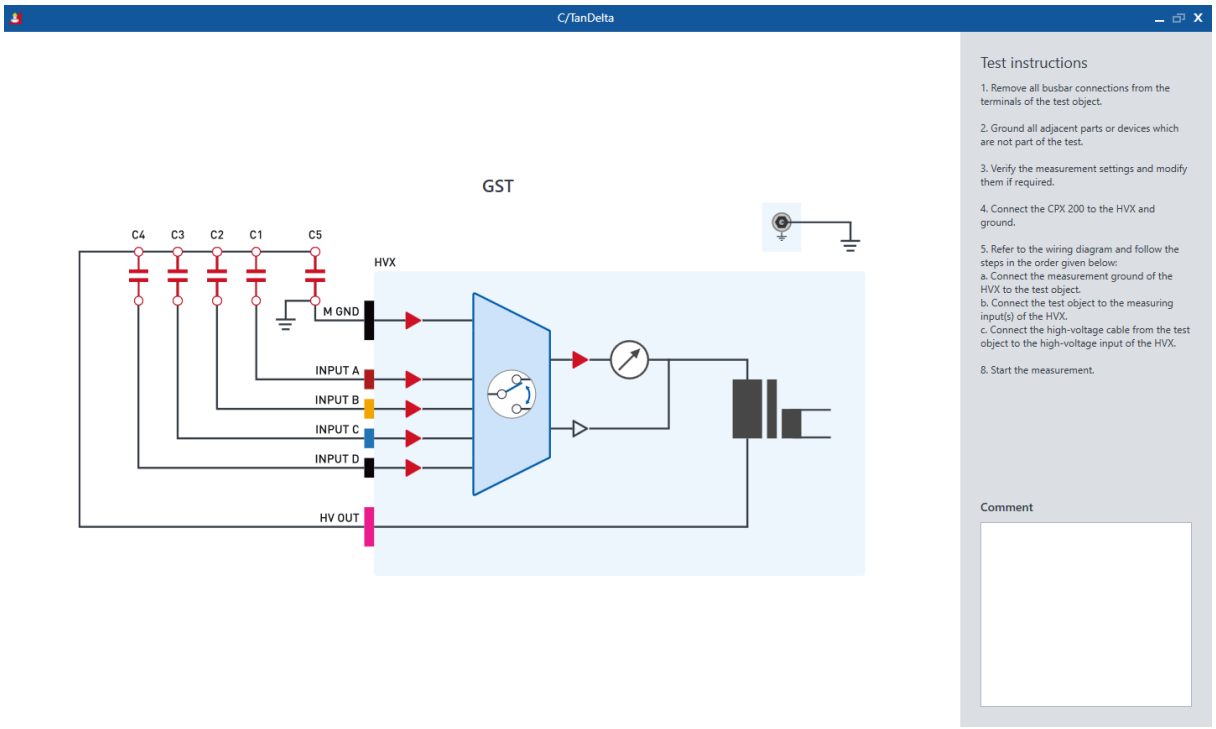

Figure 11-3: Wiring diagram depicting the measuring and guarding for the **GST** measurement mode

11.2.3 Settings and conditions

The following measurement settings are applicable for *CPXpert* as well as *TouchControl*.

11.2.3.1 Measurement modes

The *HVX10* has 5 external measurement inputs: **IN A**, **IN B**, **IN C**, **IN D**, and **M GND** (Measurement Ground). Each input is connected to a switch matrix and can be individually switched either to the measuring path or the guard path.

When an input is switched to the measuring path, the current flowing through the insulation is measured and becomes part of the measurement result. If it is switched to guard path, the current bypasses the measurement instrument and is not included in the measurement result.
The switch matrix enables measuring multiple parts of the insulation individually or in combination, without the need for changing the wiring at the test object.
The overall measurement result is the sum of all input channels connected to the measurement path.

Historically, 2 terms have evolved: **UST** for “ungrounded specimen test” and **GST** for “grounded specimen test”. In **UST** configuration, the input channel **M GND** is connected to guard and never part of the measurement result. In **GST** configuration, **M GND** is connected to the measurement path and always part of the result.

All supported **UST** measurement configurations are shown in the following table. In **UST** mode, all measured channels are listed in the name of the mode.

Table 11-2: UST measurement modes

Mode	IN A	IN B	IN C	IN D	M GND (Measurement Ground)
UST - A	Measured	Guarded	Guarded	Guarded	Guarded
UST - B	Guarded	Measured	Guarded	Guarded	Guarded
UST - C	Guarded	Guarded	Measured	Guarded	Guarded
UST - D	Guarded	Guarded	Guarded	Measured	Guarded
UST - A+B	Measured	Measured	Guarded	Guarded	Guarded
UST - A+C	Measured	Guarded	Measured	Guarded	Guarded
UST - A+D	Measured	Guarded	Guarded	Measured	Guarded
UST - B+C	Guarded	Measured	Measured	Guarded	Guarded
UST - B+D	Guarded	Measured	Guarded	Measured	Guarded
UST - C+D	Guarded	Guarded	Measured	Measured	Guarded
UST - A+B+C	Measured	Measured	Measured	Guarded	Guarded
UST - A+B+D	Measured	Measured	Guarded	Measured	Guarded
UST - A+C+D	Measured	Guarded	Measured	Measured	Guarded
UST - B+C+D	Guarded	Measured	Measured	Measured	Guarded
UST - A+B+C+D	Measured	Measured	Measured	Measured	Guarded

All supported **GST** measurement configurations are shown in the following table. Note that the channels that are guarded are part of the name of the mode, contrary to **UST** mode.

Table 11-3: GST measurement modes

Mode	IN A	IN B	IN C	IN D	M GND (Measurement Ground)
GST	Measured	Measured	Measured	Measured	Measured
GSTg - A+B+C+D	Guarded	Guarded	Guarded	Guarded	Measured
GSTg - A	Guarded	Measured	Measured	Measured	Measured
GSTg - B	Measured	Guarded	Measured	Measured	Measured
GSTg - C	Measured	Measured	Guarded	Measured	Measured
GSTg - D	Measured	Measured	Measured	Guarded	Measured
GSTg - A+B	Guarded	Guarded	Measured	Measured	Measured
GSTg - A+C	Guarded	Measured	Guarded	Measured	Measured
GSTg - A+D	Guarded	Measured	Measured	Guarded	Measured
GSTg - B+C	Measured	Guarded	Guarded	Measured	Measured
GSTg - B+D	Measured	Guarded	Measured	Guarded	Measured
GSTg - C+D	Measured	Measured	Guarded	Guarded	Measured
GSTg - A+B+C	Guarded	Guarded	Guarded	Measured	Measured
GSTg - A+B+D	Guarded	Guarded	Measured	Guarded	Measured
GSTg - A+C+D	Guarded	Measured	Guarded	Guarded	Measured

Mode	IN A	IN B	IN C	IN D	M GND (Measurement Ground)
GSTg - B+C+D	Measured	Guarded	Guarded	Guarded	Measured

Typically, **UST** measurements are more robust to external noise and stray capacitances compared to **GST** measurements and should be preferred, if both modes are possible.

11.2.3.2 Sweeps

Both *CPXpert* and *TouchControl* come equipped with default sweep profiles for automatic test list population. By default, **Optimized Sweep (Full)** is selected to ensure optimal testing coverage.

To access other sweep profiles,

- in *CPXpert*

  Choose **Sweep** from the drop-down menu.
- in *TouchControl*

Click the button  in the **Overview** section within the **Table** tab.

The following options are available:

Optimized Sweep (Full) - Recommended



Optimized Sweep (Full) is the suggested sweep profile for executing capacitance and dissipation/power factor measurements within the frequency range of 1 Hz to 600 Hz. This profile amalgamates voltage and frequency sweep profiles, ensuring comprehensive test coverage. **Optimized Sweep (Full)** is designed to provide thorough insulation analysis.

Sweep properties:

- Allows full comparison to historic results by utilizing a 10 kV testing voltage at the rated asset frequency of either 50 or 60 Hz.
- Allows for the examination of voltage dependency effects by providing results for both 2 kV and 10 kV at the asset's rated frequency.
- Extends the low frequency range to 1 Hz to support the assessment of the test object.
- Provides high quality data to ensure a sufficient basis for comparison and trend analysis for future reference.

Optimized Sweep (Fast)



The **Optimized Sweep (Fast)** profile, in comparison to **Optimized Sweep (Full)**, skips measurement points with a frequency below 15 Hz.
It is specifically designed for time-optimized testing, utilizing a combination of voltage and frequency sweep profiles. This allows for efficient testing while still providing a comprehensive basis for result analysis.

Sweep properties:

- Facilitates assessments in accordance with IEC and IEEE standards at the rated asset frequency of either 50 or 60 Hz, utilizing a 10 kV testing voltage.
- Allows for the examination of voltage dependency effects by juxtaposing measurement points at 2k V AC and 10 kV AC at the asset's rated frequency.

Voltage sweep



Measurement points are taken at every 1 kV increment up to 10 kV, in accordance with the rated asset frequency, using the **Voltage sweep** profile.

A typical application of the **Voltage sweep** profile is to identify defects that are dependent on the test voltage.

Sweep properties:

- Facilitates assessments in accordance with IEC and IEEE standards at the rated asset frequency of either 50 or 60 Hz.

  Note: The limits of assessments depend on the type of asset being tested.
- Allows for the examination of voltage dependency effects.

Frequency sweep



Measurements are performed in the frequency range of 15 to 400 Hz using a 2 kV setting with the **Frequency sweep** profile. Use this profile when measurement results need to be accurately comparable with collected historical data.

The **Frequency sweep** profile is only available in *TouchControl*.

Sweep properties:

- Facilitates assessments in accordance with IEC and IEEE standards at the rated asset frequency of either 50 or 60 Hz, utilizing a 2 kV AC testing voltage.

  Note: The limits of assessments depend on the type of asset being tested.

Manual sweep



The **Manual sweep** profile enables full customization of the sweep profile within a range of 100 V to 10 kV and 1 Hz to 600 Hz.

The full voltage of 10 kV is only available in a frequency range between 45 and 65 Hz: Outside of these frequencies, derating will affect the maximum voltage.

Both *CPXpert* and *TouchControl* will automatically display the permissible maximum output voltage range if the entered test voltage falls outside the hardware limits.

11.2.3.3 Noise suppression / Avoid test frequency

When **Noise suppression** is activated, the setting will override the default test frequency for measurements.

Typically, *CPXpert* and *TouchControl* take the asset's nominal frequency as default frequency, which is commonly 50 Hz or 60 Hz. When **Noise suppression** is enabled:

The **Avoid Test Frequency** feature is pre-configured for each test to reduce the impact of external noise, ensuring more accurate results.

- Instead of using the default rated frequency, the system will conduct measurements at 2 alternative frequencies: One below and one above the default frequency.
- The median value then is calculated based on these 2 measurements.

Frequencies other than the default rated frequency remain unaffected by this setting.

11.2.3.4 Quick frequency change

In case of problems during a **C/Tan Delta** measurement (error 0x400D00C9), the *CPX 200* can be switched to a "slow mode". If the **Quick frequency change** option button is turned to **Off**, the *CPX 200* no longer quickly switches between frequencies during the measurement sequence but rather ramps down before every frequency change. While this results in a more stable measurement, it also takes considerably more time to finish the measurement sequence. By default, the **Quick frequency change** is activated.

11.2.3.5 Test conditions

Environmental factors can have a significant impact on the measurements of capacitance and dissipation/power factor. It is crucial to document the surrounding conditions at the time of testing.

Ambient temperature

Ambient temperature is the temperature of the environment at the location of the test.

Test object temperature

Insulation temperature has a significant impact on the measurement results of dissipation factor and power factor measurements. When performing these measurements on power transformers, the top oil temperature should be recorded as the test object temperature. It closely correlates with the average insulation temperature.

Alternatively, the winding temperature or asset surface temperature can be used.

It is recommended to document the method used to determine the test object's temperature. The **Comment** section in *CPXpert* can be used for this purpose.

For power transformers, the IEEE C57.12.90:2021 standard recommends conducting tests at an insulation temperature as close as possible to 20 °C (68 °F).

Humidity

▶ Enter the relative humidity in %.

Depending on temperatures and relative humidity, moisture can condensate on surfaces. The wet surfaces result in an increase of leakage currents, which can affect dissipation factor or power factor readings. To ensure accurate measurements in humid environments, take extra precautions to keep the surfaces dry.

With the information of ambient and test object temperature as well as the humidity it is possible to calculate the dew point and estimate the risk of condensation on the test object.

Weather

▶ Enter the ambient weather condition during the test.

Just as humidity can affect the amount of moisture on asset surfaces, so can the current weather condition. Outdoor measurements taken during periods of rain, fog, or snow can lead to an increase of surface leakage currents.

11.2.3.6 Correction factors

Correction factors such as **Temperature correction** and **Reference voltage** can be used to modify the measured values. These correction factors are applied only when you explicitly set them. You have the option to deactivate the correction factor at any time to display the original, unadjusted measurement values.

Temperature correction

Temperature correction modifies the measured dissipation and power factor values by multiplying them with the entered **Temperature correction** factor.

Reference voltage

The **Reference voltage** correction method linearly extrapolates the measured current and watt loss values to the selected reference voltage, typically 10 kV. The extrapolation is based on the ratio of the applied test voltage to the reference voltage. It may be used if a certain test voltage cannot be applied. It should be used with caution, since it does not account for voltage-dependent factors of nonlinear systems. While this method may provide a useful approximation, it is essential to be aware of its limitations, and the results need to be interpreted accordingly.

11.2.4 Measurement data

Table 11-4: Measurement data for the **C/Tan Delta** test

Data	Description
No.	Number of the measurement
Measurement	Arrangement of the measurement
Mode	Test mode according to IEEE Std 62-1995
Sweep	Utilized sweep settings
V test	Target voltage
Freq.	Target frequency
V Out	Measured output voltage
I meas.	Measured output current **Note:** The measured output current may differ from the injected test current. It varies based on the selected mode and the configuration of the test setup.
DF / PF	Measured dissipation/power factor value **Note:** The corresponding value is based on the defined loss index.
Cap. meas	Measured capacitance value
Assessment	Assessment of the measurement point

11.3 Insulation Resistance



Insulation Resistance measures the leakage current through insulation by applying a steady-state DC voltage. Healthy insulations have minimal leakage currents and thus high insulation resistance values.

⚠ DANGER

Death or severe injury caused by high voltage or current

- ▶ Never use the *HVX10* without a solid connection to ground with at least 6 mm^2.
- ▶ Use a grounding point as close as possible to the test object.
- ▶ Make sure to position the test object in the danger zone.
- ▶ Make sure not to exceed the rated voltage of the asset insulation when applying the test voltage. Operating beyond the rated voltage of the asset can result in damage to the insulation under test.
- ▶ Never remove any cables while a red indicator light is lit or flashing.

For more information related to the **Insulation Resistance** test, refer to the following sections:

- Safety (page 13)
- Measurement setup (page 84)
- HVX10 Measurement modes (page 116)
- Assessment rules (page 62)

11.3.1 Testing information

The **Insulation Resistance** test is a universally applicable method used for various types of asset insulation. Note that the setup used for the dissipation/power factor and capacitance measurement can also be utilized to perform the **Insulation Resistance** test.

The *HVX10* is designed to execute 1 measurement at a time. If multiple measurements are conducted consecutively, the insulation may remain polarized from the previous measurements, potentially affecting the accuracy of subsequent measurements. To depolarize the insulation, it's recommended to short-circuit and ground all accessible terminals for the same duration as the injection.

The generalized wiring diagram will indicate which inputs are actively measuring and which are designated to bypass any measurement currents based on the selected measurement mode.

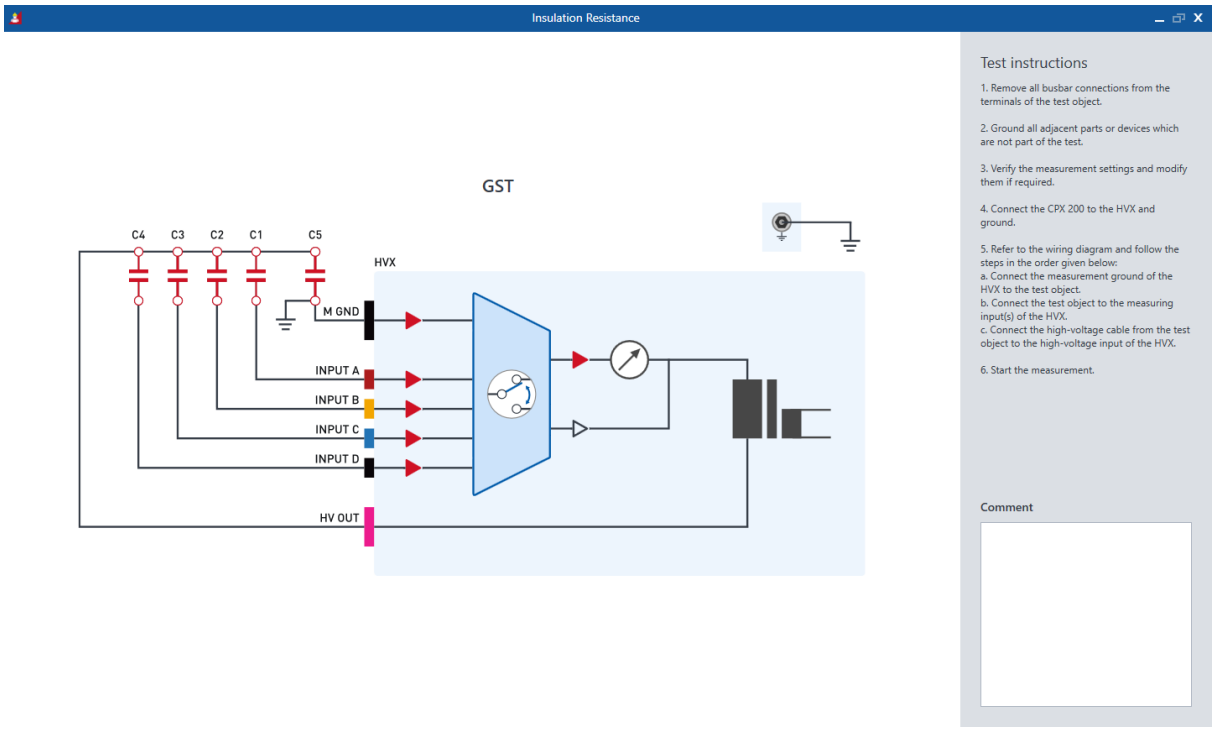

Figure 11-4: Wiring diagram depicting the measuring and guarding for the **GST** measurement mode

Important Considerations:

- It is not mandatory to connect all 4 measurement inputs of the *HVX10*.
- When setting up a measurement input for guarding – indicated by a grey capacitance symbol – it is not always required to establish a wiring from the corresponding *HVX10* input to the test object. The measurement guard input should only be connected in scenarios where it is essential to actively bypass unwanted measurement currents.
  For example: In case of overall power transformer and C1 measurements, there may be specific conditions where additional guarding on the bushing surface is necessary.

11.3.1.1 Power transformer

The following modes can be used to determine the overall power transformer insulation resistance values.

Table 11-5: Insulation test configuration for two-winding transformers

HV OUT	Result	Mode	INPUT A	M GND
HV	C_{HL}	UST - A	Measured	Guarded
	C_H	GSTg - A+B+C+D	Guarded	Measured
	$C_{HL} + C_L$	GST	Measured	Measured
LV	C_{LH}	UST - A	Measured	Guarded
	C_L	GSTg - A+B+C+D	Guarded	Measured
	$C_L + C_{LH}$	GST	Measured	Measured

Table 11-6: Insulation test configuration for three-winding transformers

HV OUT	Result	Mode	INPUT A	INPUT B	M GND
HV	C_{HL}	UST - A	Measured	Guarded	Guarded
	C_H	GSTg - A+B+C+D	Guarded	Guarded	Measured
	C_{HT}	UST - B	Guarded	Measured	Guarded
	$C_{HL} + C_H + C_{HT}$	GST	Measured	Measured	Measured
LV	C_{LH}	UST - A	Measured	Guarded	Guarded
	C_L	GSTg - A+B+C+D	Guarded	Measured	Guarded
	C_{LT}	UST - B	Guarded	Guarded	Measured
	$C_{LH} + C_L + C_{LT}$	GST	Measured	Measured	Measured
TV	C_{TH}	UST - A	Measured	Guarded	Guarded
	C_T	GSTg - A+B+C+D	Guarded	Measured	Guarded
	C_{TL}	UST - B	Guarded	Guarded	Measured
	$C_{TH} + C_L + C_{LT}$	GST	Measured	Measured	Measured

11.3.2 Settings and conditions

The following measurement settings and conditions are applicable for *CPXpert* as well as *TouchControl*.

Table 11-7: Available settings for the **Insulation Resistance** test

Setting	Description
Time	Duration of the measurement
PI	When the checkbox is selected, the polarization index will be automatically calculated based on the specified times: **Time 1** and **Time 2**.
DAR	When the checkbox is selected, the Dielectric Absorption Rate will be automatically calculated based on the specified times: **Time 1** and **Time 2**.
Test object temperature	Recording the **Test object temperature** during testing provides a solid foundation for applying an appropriate correction factor either during or after the measurement.
Ambient temperature	If the temperature of the test object cannot be obtained, the on-site **Ambient temperature** can serve as a viable alternative for applying appropriate correction factors during or after the measurement.
Humidity	The relative ambient **Humidity** can indicate whether exposed asset surfaces might be subject to moisture films. This could potentially lead to additional surface leakage currents, which would impact the current readings.

Setting	Description
Dew point	The **Dew point** is the temperature at which the water vapor in a given volume of air reaches saturation and condenses to form dew. This point varies depending on the amount of water vapor present in the air, with more humid air having a higher **Dew point** than dry air. If the **Dew point** temperature is reached, condensation occurs. This leads to ineffective insulation and the deterioration of materials sensitive to moisture. The **Dew point** can be calculated from the air temperature and relative humidity using the Magnus formula: $T_S = \frac{b \times \alpha(T, RH)}{a - \alpha(T, RH)}$ where: • T_s is the dew point temperature (in degrees Celsius) • T is the air temperature (in degrees Celsius) • RH is the relative humidity of the air (in percent) • a = 17.625 and b = 243.04 °C are the Magnus coefficients • $\alpha(T, RH) = ln(RH/100) + aT/(b + T)$
Time out of service	**Time out of service** in days
Temperature correction	When the checkbox is selected, the **Temperature correction** modifies the measured **Insulation Resistance** values by multiplying them with the stated **Temperature correction** factor.

11.3.3 Measurement data

Table 11-8: Measurement data for the **Insulation Resistance** test

Data	Description
No.	Number of the measurement
Measurement	Arrangement of the measurement
Mode	Test mode according to IEEE Std 62-1995
V test	Test voltage
V out	Measured output voltage based on **HV OUT**
I meas.	Measured output current based on **HV OUT**
Time	Elapsed measurement time
IR	Measured insulation resistance **Note:** When correction factors are utilized, the measured insulation resistance values are adjusted by multiplying them with the designated correction factor.
PI	Calculated polarization index
DAR	Calculated Dielectric Absorption Rate based on **Time 1** and **Time 2**
Assessment	Assessment of the measurement sequence

11.3.4 Testing recommendation

1. Before testing, check the rated voltage of the test object. If in doubt, initially start with a small testing voltage level such as 500 V to not exceed the applicable insulation capability of the test object.

   Note: Before conducting **Insulation Resistance** measurements, it is important to note the test object temperature as the results are temperature dependent. Recording the temperature during testing provides a solid foundation for applying an appropriate correction factor either during or after the measurement.
   Ideally, the insulation or winding temperature is derived from integrated transformer sensors. If integrated sensors are not available, the surface temperature can be measured with temperature meters.

2. Clean any wet or polluted areas on the exposed asset surface to avoid or minimize unwanted leakage currents.

12 Current Transformer

12.1 CT Ratio



CT Ratio measurements are performed as a functional test of the current transformer performance during manufacturing, factory acceptance, as part of commissioning tests, or as a performance test after an outage. The measured current transformer ratio is compared to the design and nameplate specifications and to previous measurement results. The error can be calculated for each testing point. Deviations from the specifications may indicate internal faults such as open or short-circuits or faults during production. Ratio errors may cause a malfunction of protection and false interpretation of the system voltage/current.

⚠ DANGER

Death or severe injury caused by high voltage or current

Feeding test voltage to a tap of a CT can cause dangerous voltages on other taps and windings.

- ▶ Do not touch tapped windings.
- ▶ Make sure that no secondary CT windings are open.

⚠ DANGER

Death or severe injury caused by high voltage or current

- ▶ Do not touch other taps or windings of the CT during the test. They carry dangerous voltage.
- ▶ Do not exceed the current specification of the CT.
- ▶ When testing multi-core CTs, make sure that no other windings of the CT are open. Leave the secondary windings of the other (non-measured) cores connected, or short-circuit them if the windings are open.
- ▶ If the measurement is interrupted due to, for example, an unexpected loss of supply voltage or erroneous behavior of the *CPX 200*, do not touch the test setup until the energy has dissipated over time.
  Note that the length of time depends heavily on the test object.

For more information related to the **CT Ratio** test, refer to the following sections:

- Safety (page 13)
- CPX 200 safety functions and components (page 20)
- Wiring and operation (page 84)
- Conventional current transformer (page 95)
- Handling the 1 000 A AC/DC High Current Module cables (page 30)
- Assessment rules (page 62)

12.1.1 Test setup

There are several options available for conducting **CT Ratio** measurements. The wiring diagram will adjust according to the following settings:

- **Output range**
- **Current measurement**
- **Measure burden**
- **Manual input (V in)**

NOTICE

Equipment damage or loss of data possible

▶ If you are using a non-OMICRON measurement device (such as a multimeter) in manual mode, ensure that it is equipped with the correct fusing.

The figure below illustrates a typical setup for a **CT Ratio** measurement. In this setup, the burden is disconnected from the secondary side of the current transformer, and the primary injection is carried out by the **High Current Module**.

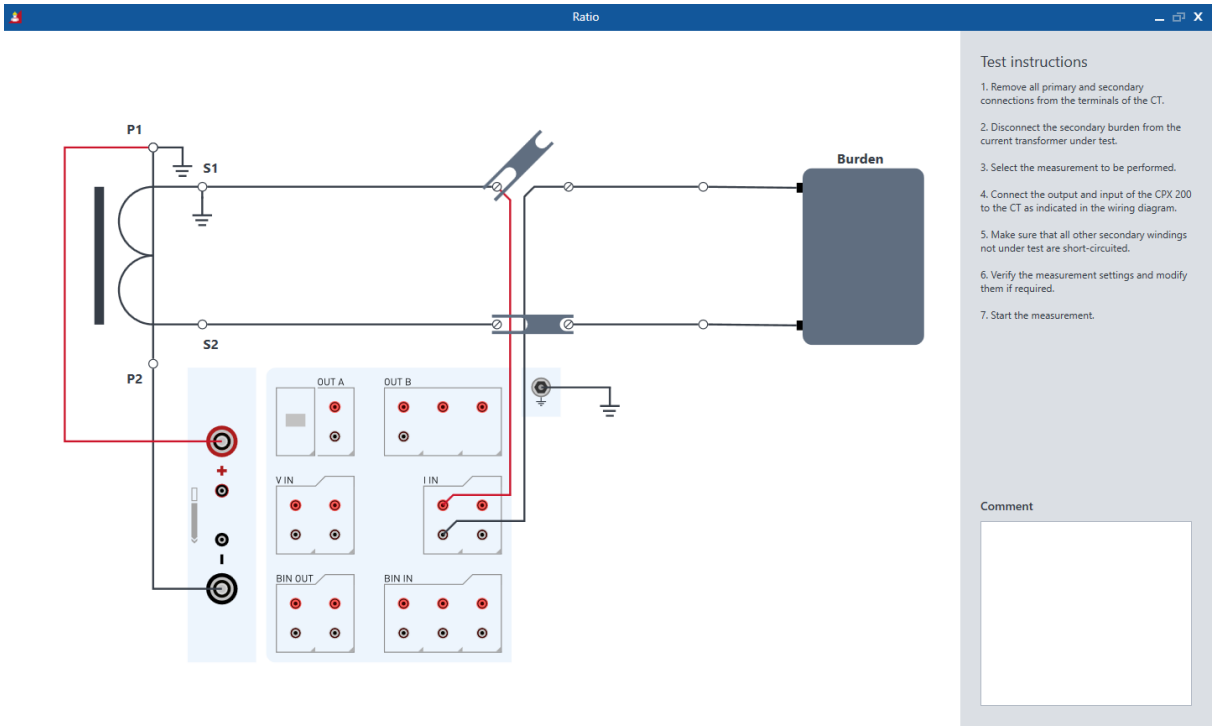

Figure 12-1: **CT Ratio** measurement wiring with the **1000 A AC High Current Module** output

The table below presents all the available wiring options using the *CPX 200* inputs, based on the selected settings.

Table 12-1: Overview of the available CT Ratio wiring options

Measurement	Utilized inputs	Current measurement	Measure burden	Manual input (V in)
CT Ratio	**I IN1**	**I IN1**	Off	Off
	V IN1	Current clamp	Off	Off
	-	Manual input	Off	Off
CT Ratio + CT Burden	**I IN1** & **V IN2**	**I IN1**	On	Off
	I IN1		On	On
	V IN1 & **V IN2**	Current clamp	On	Off
	V IN1		On	On
	V IN2	Manual input	On	Off
	-		On	On

Each **CT Ratio** wiring option can be used with either the **HC OUT (1000 A)** or the **OUT A** output.

When using longer high-current cables for the primary current transformer wiring, ensure that both cables are wired as closely together as possible in straight lines. The farther apart the cables are, the more compliance voltage is needed to compensate for the cable loop impedance. For minimum cable loop impedance, the cables might be twisted with each other.

The supplied hook-and-loop fasteners for the **High Current Module** cables can be used to secure the high-current cables together.

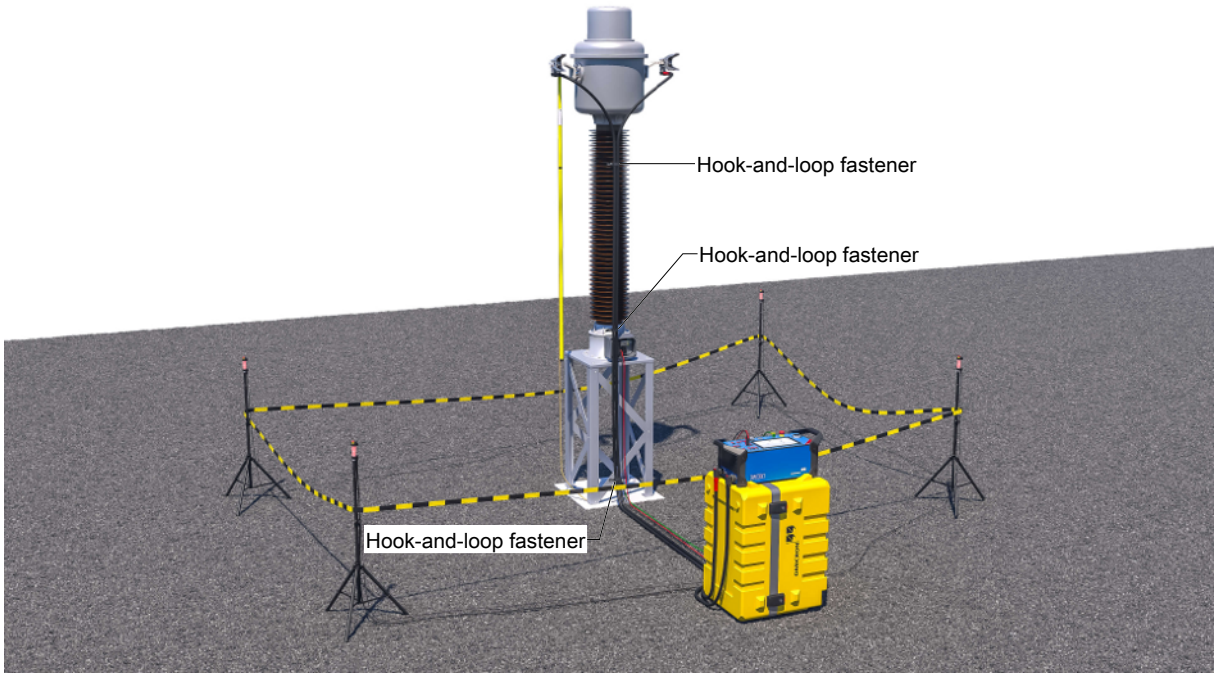

Figure 12-2: Parallel cables are wired straight and close to each other with hook-and-loop fasteners

12.1.2 Settings and conditions

The following measurement settings and conditions are applicable for *CPXpert* as well as *TouchControl*.

Table 12-2: Available settings for the **CT Ratio** test

Settings	Description
Phases	Radio buttons for the selection between single-phase or three-phase measurements
Test frequency	The target test frequency. By default, this frequency is set to match the rated frequency of the current transformer.
Auto keep	**Default option**: • **Auto keep** = **On** By default, **Auto keep** is enabled. This means that the *CPX 200* will automatically record measurement results once stable measurement conditions have been achieved. **Alternative option**: • **Auto keep** = **Off** In this mode, the operator has the flexibility to record the measurement results when they deem appropriate, using the **Keep** button, located in the **Live bar**.
Output range	The **Output range** determines the output that will be utilized. The available options are: • **1 kA (HC OUT)** • **70 A (OUT A)** • **35 A (OUT A)** • **8 A (OUT A)** **Note:** To use the **HC OUT** output, the *CPX 200* must be equipped with the **High Current Module**.
Current measurement	The **Current measurement** option determines how the secondary current transformer current in the field **I in** is measured. **Default option**: • **I IN1 (Default option)** The tap combination under test is directly wired to the **I IN1** input of the *CPX 200*. **Alternative options**: • **Current clamp** A current clamp connected to the **V IN1** input of the *CPX 200* is used. This option is relevant when the secondary side of the current transformer cannot be disconnected from its operating burden. • **Manual input** An external current clamp not connected to the *CPX 200* or the direct readings from the connected relay are used to measure the current of the secondary current transformer.

Settings	Description
Clamp ratio	The **Clamp ratio** is utilized to compute the secondary current reading in the field **I in**, which is based on the voltage measured at the **V IN1** input of the *CPX 200*. **Note:** To activate this field, you need to select **Current clamp** in the **Current measurement** drop-down menu.
Measure burden	**Default option**: • **Measure burden** = **Off** In this mode, only the current transformer ratio measurement is performed. **Alternative option**: • **Measure burden** = **On** In this mode, both the operating burden and the current transformer ratio are measured.
Manual input (V in)	**Default option**: • **Manual input (V in)** = **Off** In this mode, the voltage across the test burden in the field **V in** is measured using the **V IN2** input of the *CPX 200*. **Alternative option**: • **Manual input (V in)** = **On** In this mode, the voltage across the burden in the field **V in** is manually entered. **Note:** To activate this field, you need to select the **Measured Burden** checkbox.

The following automatic assessment rules can be utilized in *CPXpert*.

Table 12-3: Available assessment rules for the **CT Ratio** test

Assessment	Description
Auto assessment	**Default option**: • **Auto assessment** = **On** In this mode, the test results will be automatically evaluated when they are available. The assessment is based on the specified limits. Note that these automatic assessments can be manually overridden if necessary. **Alternative option**: • **Auto assessment** = **Off** In this mode, the test results can be evaluated manually when they are available.
Ratio deviation (+/-)	Test results are marked as ‘Pass’ if the calculated ratio deviation falls within the specified percentage limit.
Phase deviation (+/-)	Test results are marked as ‘Pass’ if the calculated phase deviation falls within the specified degree limit.

12.1.3 Measurement data

Table 12-4: Measurement data for the **CT Ratio** test

Data	Description
Phase	Identification of the phase under test **Note:** The **Phase** field appears only when **Phases** = **3** is selected in the **Current transformer** tile.
Tap	Identification of the tap combination under test
I test	Target current on the primary side of the current transformer
I out	Measured current at the primary side of the current transformer based on **OUT A** or **HC OUT**.
I in	Measured secondary current of the current transformer based on **I IN**.
Ratio	Calculated ratio of the current transformer $Ratio = \frac{K_N \times I_{in} - I_{out}}{I_{out}} \times 100\,\%$ Kn = rated current transformer ratio, here: I out / I in
Ratio error	Deviation of the measured ratio from the rated ratio.
Phase error	Measured phase error between the primary and secondary current.
Polarity	Polarity status **Correct**: -45° ≤ $I_{in\ phase}$ - $I_{in\ phase}$ ≤ 45 ° **Reversed**: All other cases
Assessment	Assessment of the measurement point

12.1.4 Testing recommendation

For ring-core current transformers, it is typically sufficient to perform the measurement with a single high-current cable. The high-current cable can be looped through the current transformer and connected to the *CPX 200* at both ends.

Ensure that the high-current cable is wired in the correct direction. The current transformer terminals **P1/H1** should face the **HC OUT (1000 A) +** side, and **P2/H2** should face the **HC OUT (1000 A) –** side.

For the most accurate readings, it is recommended to loop the high-current cable through the current transformer centrally.



Figure 12-3: Illustration of a **CT Ratio** setup with the **HC OUT (1000 A)** and 1 high-current cable

12.2 CT Winding Resistance



The **CT Winding Resistance** measurement is performed to find possible electrical damage in windings or contact problems. If the secondary winding resistance is not to specification due to manufacturing or connection issues or due to operational aspects, an increased electrical induction might lead to overheating or operational damages.

⚠ DANGER

Death or severe injury caused by high voltage or current

Injecting direct current into test objects with inductive characteristics will charge the winding of the test object.

- ▶ Do not exceed the current specification of the CT.
- ▶ Never open the measuring circuit while current flows.
- ▶ Make sure that no secondary windings are open.
- ▶ Before disconnecting from the test set, connect the test object to protective ground on both ends.
- ▶ Ground all terminals of the test object before touching the test setup.
- ▶ Short-circuit the terminals before disconnecting the test leads.
- ▶ Disconnect the unused cables from both the test object and the test set.
- ▶ If the measurement is interrupted due to, for example, an unexpected loss of supply voltage or erroneous behavior of the *CPX 200*, do not touch the test setup until the energy has dissipated over time. Note that the length of time depends heavily on the test object.

For more information related to the **CT Winding Resistance** test, refer to the following sections:

- Safety (page 13)
- CPX 200 safety functions and components (page 20)
- Wiring and operation (page 84)
- Conventional current transformer (page 95)

12.2.1 Test setup

A typical setup for measuring the winding resistance of a current transformer (CT) is illustrated in the figure below. The measurement is conducted by injecting a current via **OUT A** on the winding under test. It is crucial to disconnect the burden from the secondary side of the current transformer before performing this measurement.

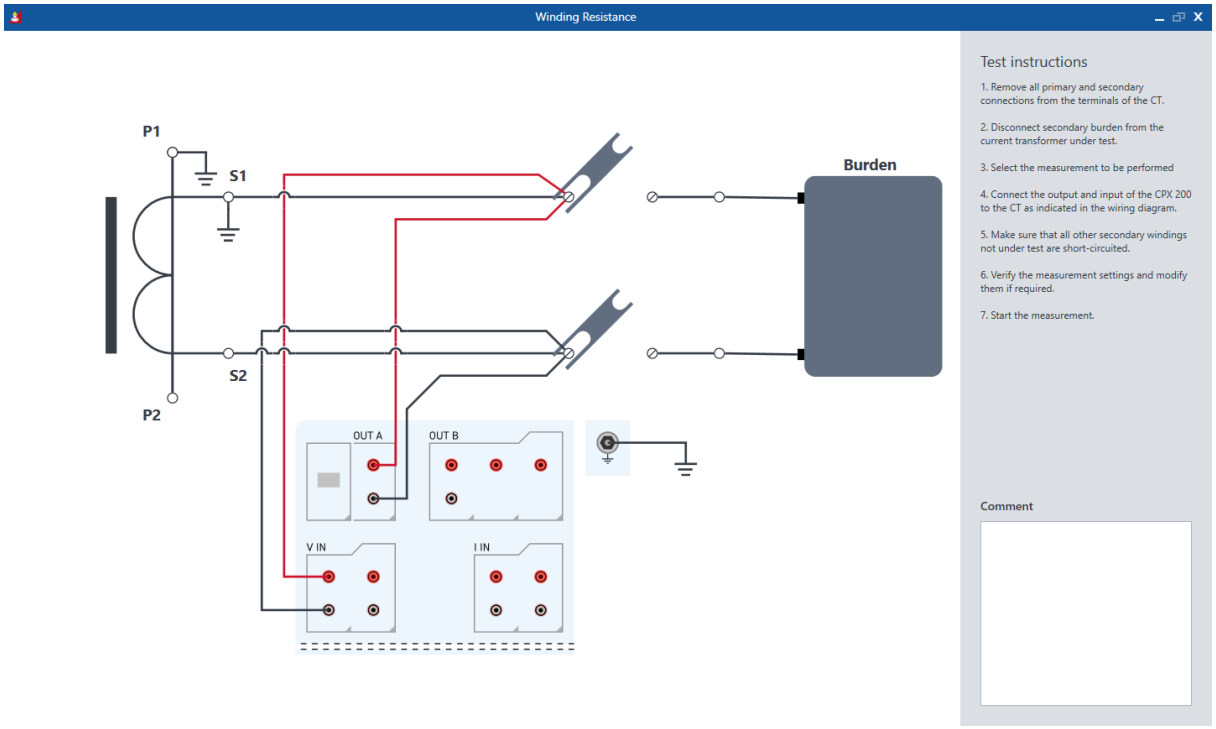

Figure 12-4: **CT Winding Resistance** measurement wiring with **OUT A**

The **CT Excitation** test can be performed with the same wiring.

When the **V IN2** input is also connected to the primary current transformer terminals, the **CT Ratio (V)** test can be performed additionally without rewiring.

During operation, one of the 2 outer winding terminals (for example S1/X1 or S2/X2) per core are connected to ground potential. The wiring diagram shows that S1/X1 and P1/H1 are grounded. It is recommended to maintain the existing grounded secondary terminal of the current transformer unchanged; therefore, P2/H2 and S2/X2 can also be grounded if applicable.

12.2.2 Settings and conditions

The following measurement settings and conditions are applicable for *CPXpert* as well as *TouchControl*.

Table 12-5: Available settings for the **CT Winding Resistance** test

Settings data	Description
Phases	Radio buttons for the selection between single-phase or three-phase measurements
Temperature	Temperature of the current transformer's winding. **Note:** If no temperature is specified, no temperature correction will be applied to the measured resistance.
Temperature reference	Reference temperature to be used for temperature correction
Auto keep	**Default option:** • **Auto keep** = **On** By default, **Auto keep** is enabled. This means that the *CPX 200* will automatically record measurement results, once stable measurement conditions have been achieved. **Alternative option:** • **Auto keep** = **Off** In this mode, the operator has the flexibility to record the measurement results when they deem appropriate, using the **Keep** button located in the **Live bar**.
Core demagnetization	**Default option:** • **Demagnetization after measurement** = **On** After completing the **CT Winding Resistance** measurement, an automatic demagnetization is performed with the following statuses: – **Not Performed**: The demagnetization process has not been initiated. – **Running**: The demagnetization process is currently in progress. – **Incomplete**: The demagnetization process started but was not completed successfully. – **Demagnetized**: The demagnetization process has been successfully completed. **Alternative option:** • **Demagnetization after measurement** = **Off** No demagnetization is performed.

Temperature correction

The measurement is temperature-corrected via the parameters **Temperature** (measured ambient temperature) and **Reference temperature** (operating temperature of the CT's secondary winding). Depending on these 2 parameters, the reference resistance (R_{ref}, temperature-compensated winding resistance) is calculated:

Table 12-6: **Temperature correction** calculation[1] for Celsius and Fahrenheit

Material	in Centigrade	in Fahrenheit
Copper	$R_{ref} = \frac{V_{in}}{I_{out}} \times \frac{235 + T_{ref}}{235 + T_{meas}}$ T_{meas}, T_{ref}: [°C]	$R_{ref} = \frac{V_{in}}{I_{out}} \times \frac{391 + T_{ref}}{391 + T_{meas}}$ T_{meas}, T_{ref}: [°F]

1 Formulae according to IEC 60076-1.

12.2.3 Measurement data

Table 12-7: Measurement data for the **CT Winding Resistance** test

Data	Description
Phase	Identification of the phase under test **Note:** The **Phase** field appears only when **Phases** = **3** is selected in the **Current transformer** tile.
Tap	Identification of the tap combination under test
I test	Target test current
Time	Elapsed time of the measurement
V in	Measured secondary voltage of the current transformer based on **V in**
I out	Measured secondary current of the current transformer based on **I out**
R meas.	Measured resistance $R_{meas} = \frac{V_{in}}{I_{out}}$ **Note:** When temperature correction factors are applied, the measured resistance values are adjusted by multiplying them with the designated correction factor.
R ref.	Temperature-corrected measured resistance
R dev.	Resistance deviation in % between the minimum and the maximum measured values evaluated within the last 10 seconds of the measurement. The results are considered stable if **R dev.** < 0.1%.
Demag. (CPXpert) **Demag state** (TouchControl)	Status of current transformer demagnetization: • **Not Performed**: The demagnetization process has not been initiated. • **Running**: The demagnetization process is currently in progress. • **Incomplete**: The demagnetization process started but did not complete successfully. • **Demagnetized**: The demagnetization process has been successfully completed.
Assessment	Assessment of the measurement point

12.2.4 Testing recommendations

4-wire connection versus 2-wire connection

When measuring the winding resistance of current transformers, it is recommended to use a 4-wire connection. This technique provides more precise measurement results compared to the 2-wire method, as it uses separate connection points for the current and voltage paths. This separation is particularly important when measuring small resistance values such as in the milliohm (mΩ) range, where the voltage drop over the cable connectors can significantly affect the measurement results.

Both connection techniques are shown in the following figure.

4-wire connection OK	**2-wire connection Do not use!**
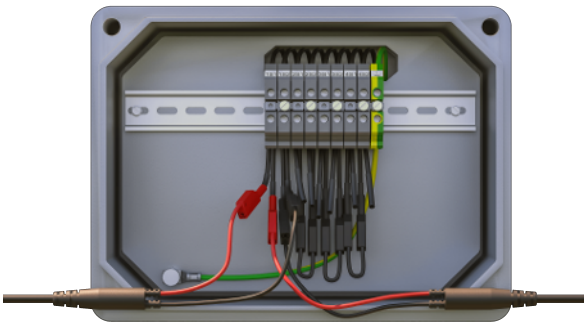	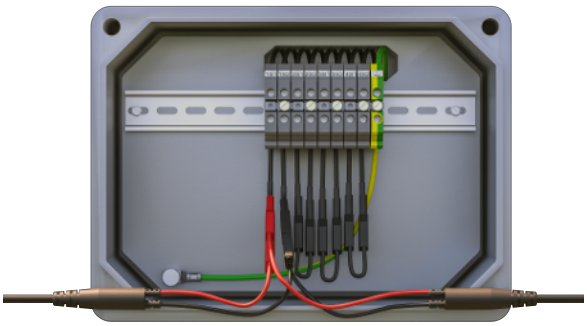
The wiring of **OUT A** and **V IN1** to the terminal box of the current transformer is established, using different terminal adapters. This setup ensures that there is no additional voltage drop across the test lead connector.	The wiring of **OUT A** and **V IN1** to the terminal box of the current transformer is established, using a separate terminal adapter for each tap. This setup can affect the measurement results due to an additional unwanted voltage drop across the test lead connectors.

If possible, always use the original coaxial test leads delivered by OMICRON. If it is necessary to use loose single-wire test leads, twist the wires to a twisted-pair line. Avoid open loops consisting of individual single-wire test leads in order to prevent interference voltages caused by magnetic fields.

If it is necessary to use clamps to connect the test leads to the secondary side of the test object, always use 2 separate 4 mm plugs for current on the clamp to establish a 4-wire connection.

12.3 CT Excitation



CT Excitation measurements are determining the magnetizing current in dependence of the excitation voltage of a current transformer. The excitation current is the current that is lost through the magnetizing branch. In-depth characteristics of operating conditions as well as the integrity of current transformer cores can be determined with this measurement.

⚠ DANGER

Death or severe injury caused by high voltage or current

Feeding test voltage to a tap of a current transformer can cause dangerous voltages on other taps and windings.

- ▶ Make sure that no secondary windings are open.
- ▶ If the measurement is interrupted due to, for example, an unexpected loss of supply voltage or erroneous behavior of the *CPX 200*, do not touch the test setup until the energy has dissipated over time. Note that the length of time depends heavily on the test object.

⚠ WARNING

Death or severe injury caused by high voltage or current possible

- ▶ Only conduct **CT Excitation** measurements on assets that comply with IEC 61869-2, IEC 60044-1, IEC 60044-6, or IEEE C57.13 standards. Failure to adhere to these standards may result in equipment damage or serious injury.

For more information related to the **CT Excitation** test, refer to the following sections:

- Safety (page 13)
- CPX 200 safety functions and components (page 20)
- Wiring and operation (page 84)
- Conventional current transformer (page 95)

12.3.1 Test setup

The figure below illustrates the setup for the **CT Excitation** measurement. In this setup, the burden is disconnected from the secondary side of the current transformer, and the secondary injection is carried out using the **OUT A** module.

NOTICE

The **CT Winding Resistance** test can be performed with the same wiring.

When the **V IN2** input is also connected to the primary current transformer terminals, the **CT Ratio (V)** test can be performed additionally without re-wiring.

During the operation, one of the 2 outer winding terminals (for example S1/X1 or S2/X2) per core are connected to ground potential. The wiring diagram consistently shows that S1/X1 and P1/H1 are grounded. It is recommended to maintain the existing grounded secondary terminal of the current transformer unchanged. Therefore, P2/H2 and S2/X2 can also be grounded if applicable.

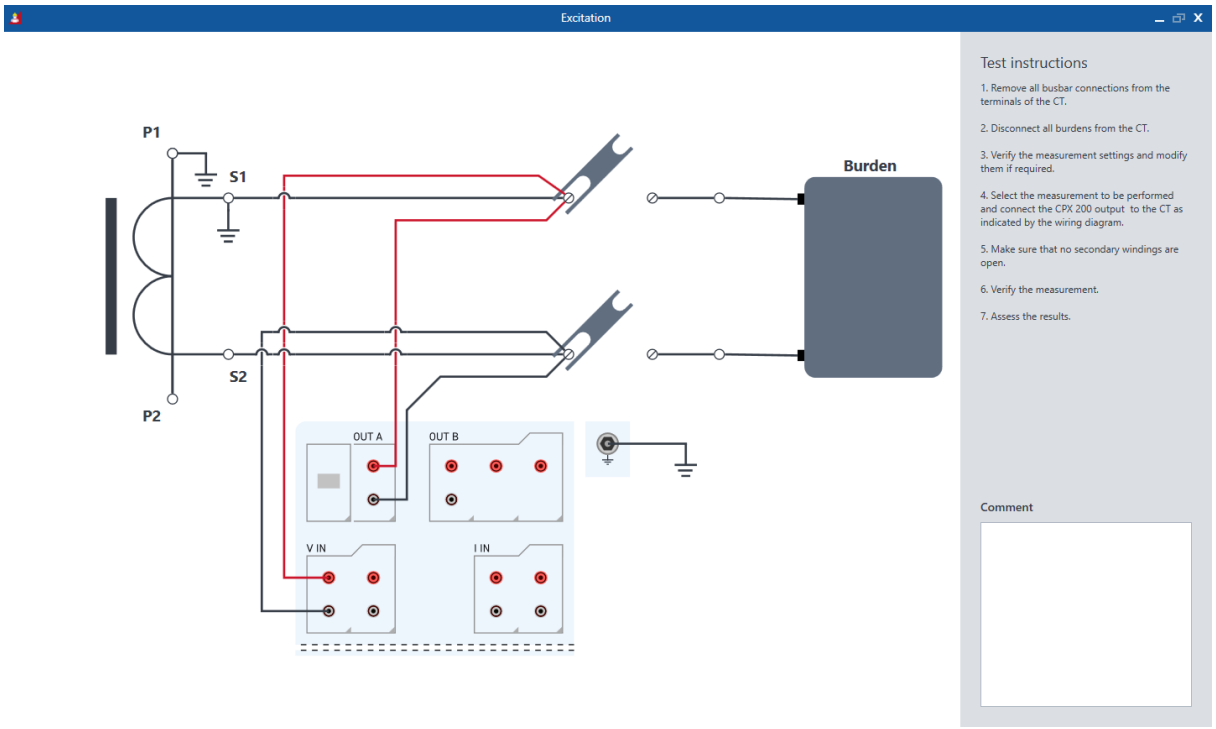

Figure 12-5: **CT Excitation** measurement wiring using **OUT A** and **V IN1**

12.3.2 Settings and conditions

The following measurement settings and conditions are applicable for *CPXpert* as well as *TouchControl*.

Table 12-8: Available settings for the **CT Excitation** test

Data	Description
Phases	Radio buttons for the selection between single-phase and three-phase measurements
Standard	The standard setting defines the method for determining the excitation curve and calculating the knee point current and voltage. Once the test is finished and the knee point calculated according to the selected method, it is possible to switch between the IEC and IEEE standards. The knee point is recalculated accordingly. **Default option:** • **IEC 61869-2** The knee point is defined as the point on the curve where a voltage increment of 10 % increases the current by 50 %. **Alternative options:** • **IEC 60044-1** The knee point is defined as the point on the curve where a voltage increment of 10 % increases the current by 50 %. • **IEC 60044-6** The knee point is defined as the point on the curve where a voltage increment of 10 % increases the current by 50 %. • **IEEE C57.12 (30°)** The knee point is defined as the point where the tangent line to the curve forms a 30° angle within a double logarithmic representation. Applies to current transformer cores with an air gap • **IEEE C57.12 (45°)** The knee point is defined as the point where the tangent line to the curve forms a 45° angle within a double logarithmic representation. Applies to current transformer cores without an air gap.

The following table provides an overview of the corresponding voltage and current definition applied in the excitation graph and the report.

Table 12-9: Definition of axes in the excitation graph

Standard	Vertical axis	Horizontal axis
IEC 60044-1	Terminal voltage	RMS current
IEC 60044-6	Core voltage	Peak current
IEC 61869-2[1]	Rectified voltage	RMS current
IEEE C57.13 (30°)	Core voltage	RMS current

Standard	Vertical axis	Horizontal axis
IEEE C57.13 (45°)	Core voltage	RMS current

[1] Calibrated to RMS

12.3.3 Measurement data

Table 12-10: Overview of the obtained measurement data in *CPXpert* and *TouchControl* for the **CT Excitation** test

Data	Description
No.	Number of the measurement
Phase	Identification of the phase under test **Note:** The **Phase** field appears only when **Phases** = **3** is selected in the **Current transformer** tile.
Tap	Identification of the tap combination under test
I knee	Calculated knee point current according to selected standard
V knee	Calculated knee point voltage according to selected standard
Assessment	Assessment of the measurement point

12.3.4 Testing recommendation

Verification of metering and protection cores can be done by comparison of knee point values between cores. Protection cores typically have higher knee point values than metering cores. Knee point calculation depends on the manufacturing standard.

▶ Use the same standard as stated on the current transformer nameplate for analysis and reporting.

12.4 CT Burden



CT Burden measures the total secondary load of a current transformer in VA, consisting of the wires from the current transformer to the burden and the burden itself. The exact operating burden must be known to ensure a correct and accurate CT operation.

The stand-alone burden test is the ideal choice when the rated burden current should be used for the measurement. A burden measurement can also be performed with the **CT Ratio** test, but the maximum of 1 000 A AC fed into the primary terminals of the current transformer via the *CPX 200* **High Current Module** might not generate the rated secondary current into the burden, unless the injected test current matches the rated primary current of the current transformer.

⚠ DANGER

Death or severe injury caused by high voltage or current

- If the measurement is interrupted due to, for example, an unexpected loss of supply voltage or erroneous behavior of the *CPX 200*, do not touch the test setup until the energy has dissipated over time. Note that the length of time depends heavily on the test object.

⚠ WARNING

Death or severe injury caused by high voltage or current possible

- Do not exceed the current specification of the burden.

NOTICE

Falsification of measurement results possible

It is important to disconnect the current transformer under test prior to the burden test.

- If you do not disconnect the current transformer for the burden test, the *CPX 200* measures the parallel impedance of the burden and the current transformer winding instead of the burden itself. Although in many cases the impedance of the current transformer is many times higher than the burden impedance, this will cause a measuring error.

For more information related to the **CT Burden** test, refer to the following sections:

- Safety (page 13)
- CPX 200 safety functions and components (page 20)
- Wiring and operation (page 84)
- Conventional current transformer (page 95)

12.4.1 Test setup

The following option is available for conducting **CT Burden** measurements. The wiring diagram will adjust according to the following setting:

- **Manual input (V in)**

The following figure illustrates a typical setup for **CT Burden** measurement. In this setup, the current is directly measured on the burden terminals.

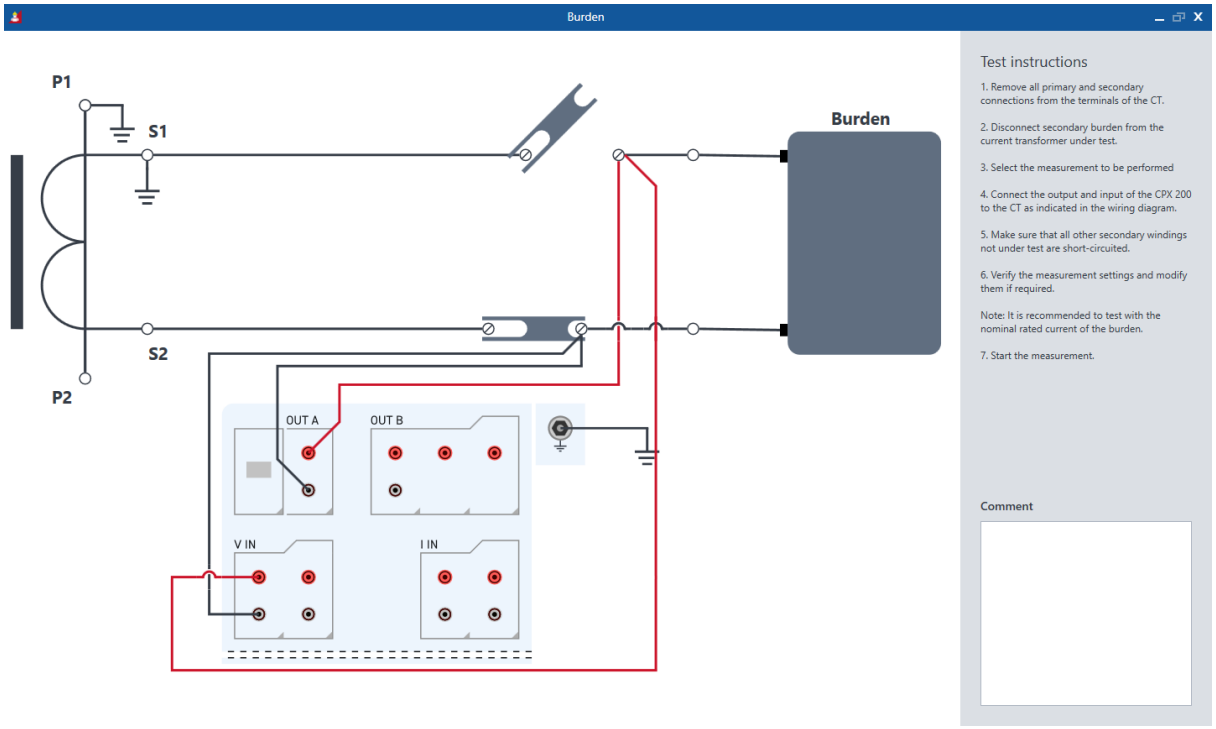

Figure 12-6: **CT Burden** measurement wiring using **OUT A** and **V IN1**

The second option is to manually enter the measured voltage in the software. The available voltage value can be directly read from the relay under test.

12.4.2 Settings and conditions

The following measurement settings and conditions are applicable for *CPXpert* as well as *TouchControl*.

Table 12-11: Available settings for the **CT Burden** test

Settings data	Description
Phases	Radio buttons for the selection between single-phase and three-phase measurements
Frequency	Target test frequency. By default, this frequency is set to match the rated frequency of the current transformer.

Settings data	Description
Auto keep	**Default option:** • **Auto keep** = **On** By default, **Auto keep** is enabled. This means that the *CPX 200* will automatically record measurement results when stable measurement conditions have been achieved. **Alternative option:** • **Auto keep** = **Off** In this mode, the operator has the flexibility to record the measurement results when they deem appropriate, using the **Keep** button located in the **Live bar**.
Output range	The output range determines the output that will be utilized. The available options are: • **35 A (OUT A)** • **8 A (OUT A)**
Manual input (V in)	**Default option:** • **Manual input (V in)** = **Off** In this mode, the voltage across the test burden in the field **V in** is measured using the **V IN2** input. **Alternative option:** • **Manual input (V in)** = **On** In this mode, the voltage across the burden in the field **V in** is manually entered.

12.4.3 Measurement data

Table 12-12: Measurement data for the **CT Burden** test

Data	Description
Phase	Identification of the phase under test **Note:** The **Phase** field appears only when **Phases** = **3** is selected in the **Current transformer** tile.
Tap	Identification of the tap combination under test
I test	Target test current
I out	Measured current at the burden based on **OUT A**.
V in	Measured or entered secondary voltage on the burden. **Note:** To manually enter the value, select the **Manual input (V sec)** checkbox.
Z	Measured burden impedance
Z phase	Measured burden phase angle
Burden	Measured burden in VA related to the rated secondary current. $Burden = I_{sr} \times \left(V_{in} \times \frac{I_{sr}}{I_{out}} \right)$
cos φ	Cosine of phase angle φ
Assessment	Assessment of the measurement point

12.5 CT Ratio (V)



CT Ratio (V) utilizes a secondary voltage injection to determine the ratio of a current transformer. This is especially helpful when the primary terminals are not directly accessible as in the case of GIS or bushing type current transformers.

⚠ DANGER

Death or severe injury caused by high voltage or current

Feeding test voltage to a tap of a current transformer can cause dangerous voltages on other taps and windings

- ▶ Do not touch tapped windings.
- ▶ Make sure that no secondary windings are open and none are short-circuited.
- ▶ If the measurement is interrupted due to, for example, an unexpected loss of supply voltage or erroneous behavior of the *CPX 200*, do not touch the test setup until the energy has dissipated over time. Note that the length of time depends heavily on the test object.

For more information related to the **CT Ratio (V)** test, refer to the following sections:

- Safety (page 13)
- CPX 200 safety functions and components (page 20)
- Wiring and operation (page 84)
- Conventional current transformer (page 95)

12.5.1 Test setup

The following option is available for conducting **CT Ratio (V)** measurements. The wiring diagram will adjust according to the following setting:

- **Manual input (V in)**

The following figure illustrates the setup for the **CT Ratio (V)** measurement. In this setup, the burden is disconnected from the secondary side of the current transformer, and the secondary injection is carried out using the **OUT A** output.

When the **V IN1** input is also connected to the secondary current transformer terminals of the core under test, the **CT Winding Resistance** and **CT Excitation** tests can be performed additionally without rewiring.

During the operation, 1 of the 2 outer winding terminals (for example S1/X1 or S2/X2) per core is connected to ground potential. The wiring diagram consistently shows that S1/X1 and P1/H1 are grounded. It is recommended to maintain the existing grounded secondary terminal of the current transformer unchanged, therefore, P2/H2 and S2/X2 can also be grounded if applicable.

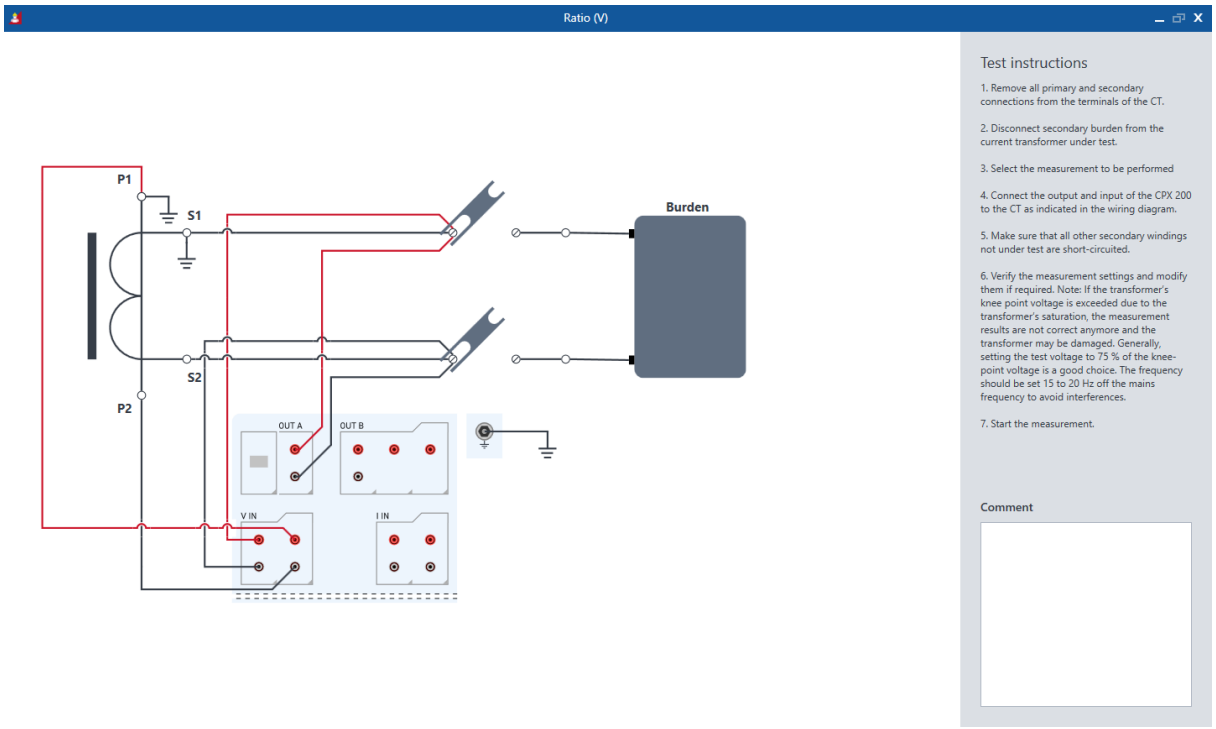

Figure 12-7: **CT Ratio (V)** measurement wiring using **OUT A** and **V IN2**

The second option is to manually enter the measured voltage within the software.

If possible, always use the original coaxial test leads delivered by OMICRON for connecting the primary side. If it is necessary to use loose single-wire test leads, twist the wires to a twisted-pair line. Avoid open loops consisting of individual single-wire test leads in order to prevent interference voltages caused by magnetic fields.



Figure 12-8: Illustration of the 6 m (20 ft) and 10 m (30 ft) coaxial cables

The 6 m (20 ft) cable variant features a shorter splice of 2 × 15 cm (6 in) compared to the 1 × 150 cm (59 in) and 1 × 15 cm splice of the 10 m (30 ft) cable variant.

If the cable length is insufficient, it can be extended using the 1 m (3 ft) black test lead.



Figure 12-9: Illustration of the 1 m (3 ft) black 2.5 mm² test lead

Connect 1 terminal of the current transformer's primary side to protective earth. If it is not possible to disconnect the utility lines from both primary terminals, connect the side of the primary circuit that is able to receive more interferences to protective earth (the primary side that is still connected to the utility lines or the side with the longer line length, respectively). The ungrounded side should be the side that receives fewer interferences.

12.5.2 Settings and conditions

The following measurement settings and conditions are applicable for *CPXpert* as well as *TouchControl*.

Table 12-13: Available settings for the **CT Ratio (V)** test

Data	Description
Phases	Radio buttons for the selection between single-phase and three-phase measurements
Delta compensation	Correction factor for ratio measurements on bushing-type current transformers installed in a delta winding transformer For more information, refer to Measurement on bushing type current transformers (page 151). **Default option:** • **Delta compensation** = **1** No compensation is applied for the field **Ratio dev**. **Alternative options:** • **Delta compensation** = **1/3** The measurement result in the **Ratio dev** field will be multiplied by 1/3. A delta compensation of 1/3 should be applied when **V IN2** is connected to the terminals of a transformer winding, and the current transformer under test is not in series. • **Delta compensation** = **2/3** The measurement result in the **Ratio dev** field will be multiplied by 2/3. A delta compensation of 2/3 should be applied when **V IN2** is connected to the 2 terminals of a transformer winding, and the current transformer under test is in series.
Test frequency	Target test frequency By default, this frequency is set to 75 Hz to avoid interference.
Auto keep	**Default option:** • **Auto keep** = **On** By default, **Auto keep** is enabled. This means that the *CPX 200* will automatically record measurement results when stable measurement conditions have been achieved. **Alternative option:** • **Auto keep** = **Off** In this mode, the operator has the flexibility to record the measurement results when they deem appropriate, using the **Keep** button located in the **Live bar**.

Data	Description
Manual input (V in)	**Default option:** • **Manual input (V in)** = **Off** In this mode, the voltage across the primary current transformer terminals is measured using the **V IN2** input. **Alternative option:** • **Manual input (V in)** = **On** In this mode, the voltage across the primary current transformer terminals is manually entered.

12.5.3 Measurement data

Table 12-14: Measurement data for the **CT Ratio (V)** test

Data	Description
Phase	Identification of the phase under test **Note:** The **Phase** field appears only when **Phases** = **3** is selected in the **Current transformer** tile.
Tap	Identification of the tap combination under test
V test	Target voltage on the secondary side of the current transformer.
V in	Measured or entered voltage at the primary side of the current transformer. ▶ To manually enter the value, select the **Manual input (V out)** checkbox.
V out	Measured secondary voltage of the current transformer based on **OUT A**
I out	Measured secondary current of the current transformer based on **OUT A**
Ratio	Calculated ratio of the current transformer $Ratio = \frac{K_N \times V_{in} - V_{out}}{V_{out}} \times 100\,\%$ Kn = rated current transformer ratio, here: V out / V in
Ratio error	Deviation of the measured ratio from the rated ratio
Phase error	Measured phase error between the primary and secondary current
Polarity	Polarity status **Correct**: $-45° \leq I_{\text{in phase}} - I_{\text{in phase}} \leq 45°$ **Reversed**: All other cases
Assessment	Assessment of the measurement point

12.5.4 Testing recommendation

- Use a test frequency of 75 Hz besides the power supply frequency. This minimizes the electrical noise influence of life systems in the near vicinity. The test voltage should be set to a maximum of 75 % in reference to the knee point voltage. Higher testing voltages may saturate the current transformer core and lead to inaccurate readings.
- For gapped cores, the position of the primary wire inside the core has a large influence on the ratio measurement results. Therefore, in order to obtain correct measurement results, it is very important to arrange the primary wire during measurement to the same position inside the core as it is during real operation. Depending on the position of the primary wire inside the core, the measured ratio can differ by up to 20 %.

The figure below shows how the ratio error can differ, depending on the position of the primary wire inside the core.

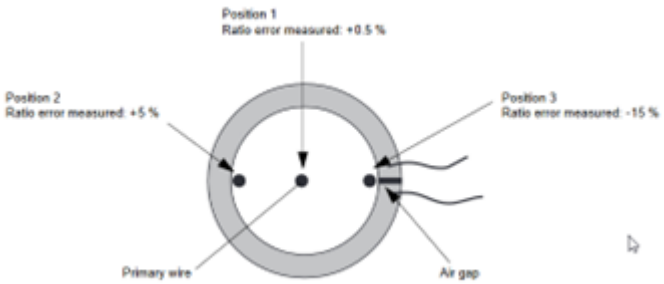

Figure 12-10: Ratio error depending on the position of the primary wire inside the gapped core

The measured ratio error may differ considerably depending on the position of the primary wire. Best measurement results are obtained if the primary wire is positioned exactly in the center of the core.

12.5.5 Measurement on bushing type current transformers

1. Disconnect all utility lines from the transformer (that is, isolate the transformer from the energized power system).
2. Connect all transformer terminals that are not used for measurement (**H2** and **H3** in the figure below) to protective earth (PE) in order to minimize the external disturbances. External disturbances can influence the measurement results because the bushings are acting as an antenna.
3. Connect terminal **H0/N** to PE.
4. Connect 1 secondary-side terminal of the current transformer to PE.
5. Connect the secondary-side of the current transformer to **OUT A** of the *CPX 200*.

▶ Connect the CT side linked to PE to the black **OUT A** socket of the *CPX 200*.

▶ Connect the open CT side to the red sockets of **OUT A**.

6. Connect the primary side of the current transformer to the **V IN2** input of the *CPX 200*.
   Make sure that the polarity is correct (same colors on same polarity).
7. Connect the secondary side of the current transformer to the **V IN1** input of the *CPX 200*.
   Make sure that the polarity is correct (same colors on same polarity).
8. Short-circuit and ground the free winding on the limb of the measured transformer to reduce the impedance of the winding that is connected in series to the primary side of the current transformer. The input impedance of the *CPX 200* may influence the measurement results, if no winding of that limb is short-circuited.

9. If the transformer has a tap changer, the tap changer should be set to a position where the regulation winding is completely bridged. It ensures that the regulation winding cannot act as a voltage divider together with the main winding of the transformer.

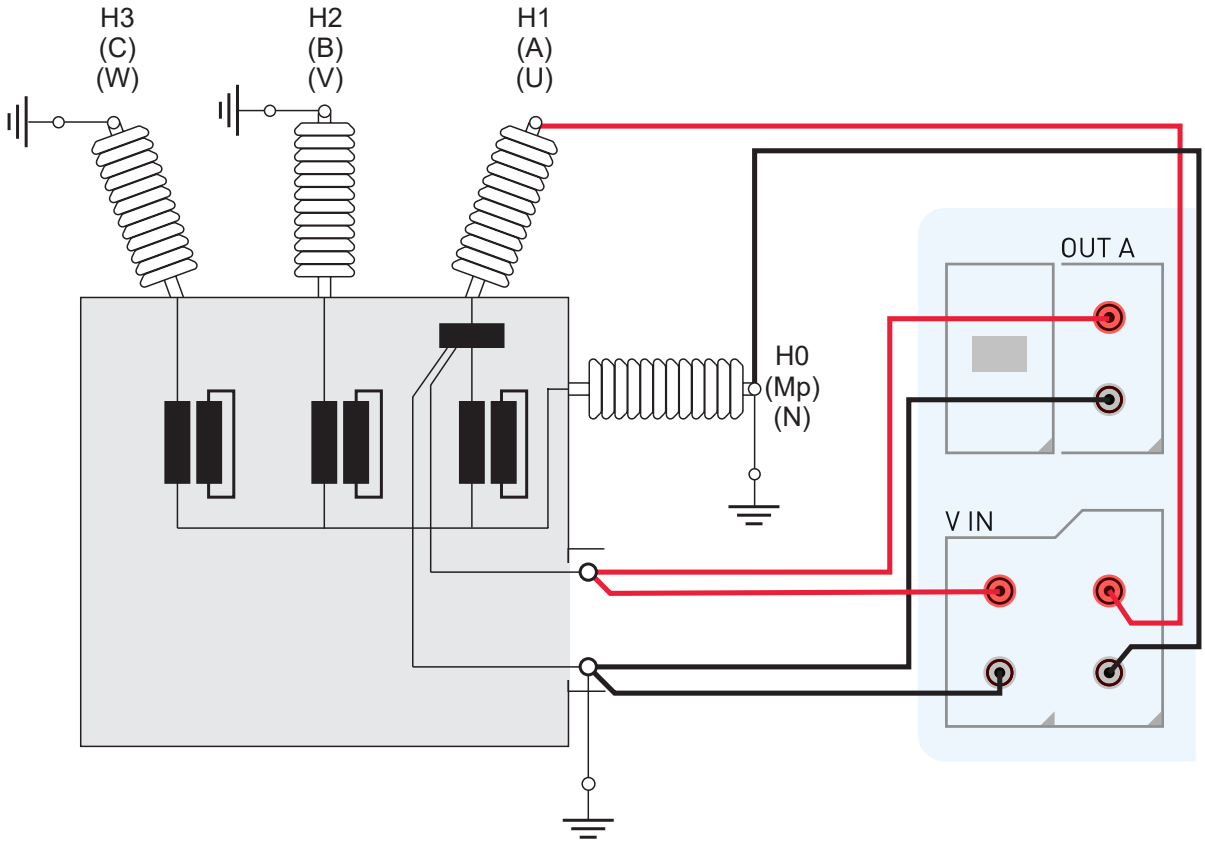

Figure 12-11: Measurement on a bushing type current transformer

The primary terminal **H1/A** must be open. Otherwise, the primary side is short-circuited and the *CPX 200* cannot obtain proper results.

12.5.5.1 Measurement on a Y (wye) winding of the transformer

To measure a Y winding of a current transformer:

- Ensure that the **main impedance** of the transformer does not influence the measurement results.
- To prevent any influence of the *CPX 200* **input impedance**, short-circuit the transformer winding on the same limb.
  It is preferable to short-circuit the windings on all limbs of the transformer.
- To prevent the influence of **external disturbances**, connect PE to all bushing terminals that are not connected to the *CPX 200*.

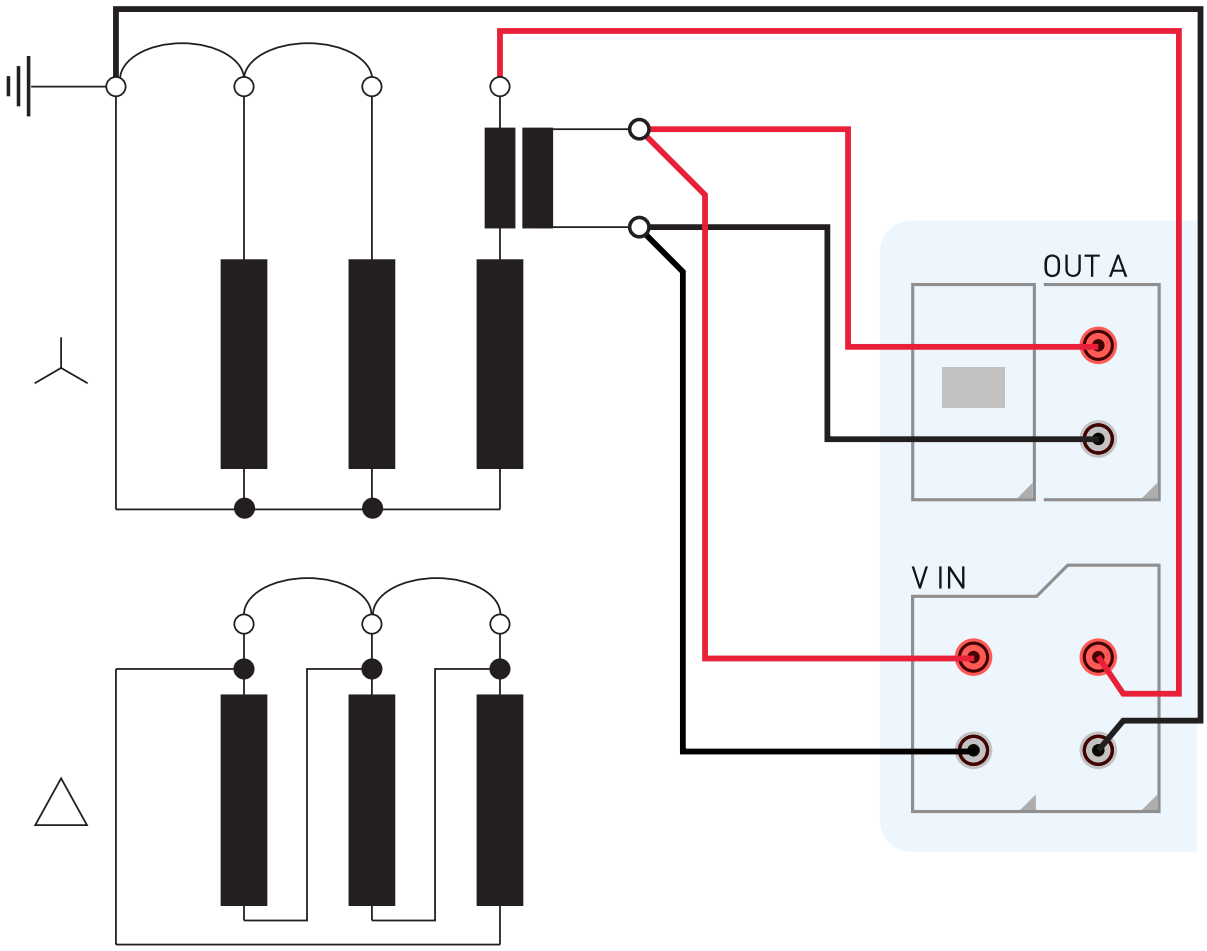

Figure 12-12: Measurement on a Y winding transformer

12.5.5.2 Measurement on a Δ (delta) winding of the transformer

CTs outside the delta winding

For the measurement of current transformers outside the delta winding (as is illustrated in the figure below), no delta compensation is needed.

In this case, only 2 parallel transformer windings are connected in series to the current transformer. This connection method has negligible influence on the winding resistance of the current transformer.

The Y winding and the remaining windings of the current transformer's delta winding are short-circuited to avoid influence of the induced flux of the current transformer's core to the measurement.

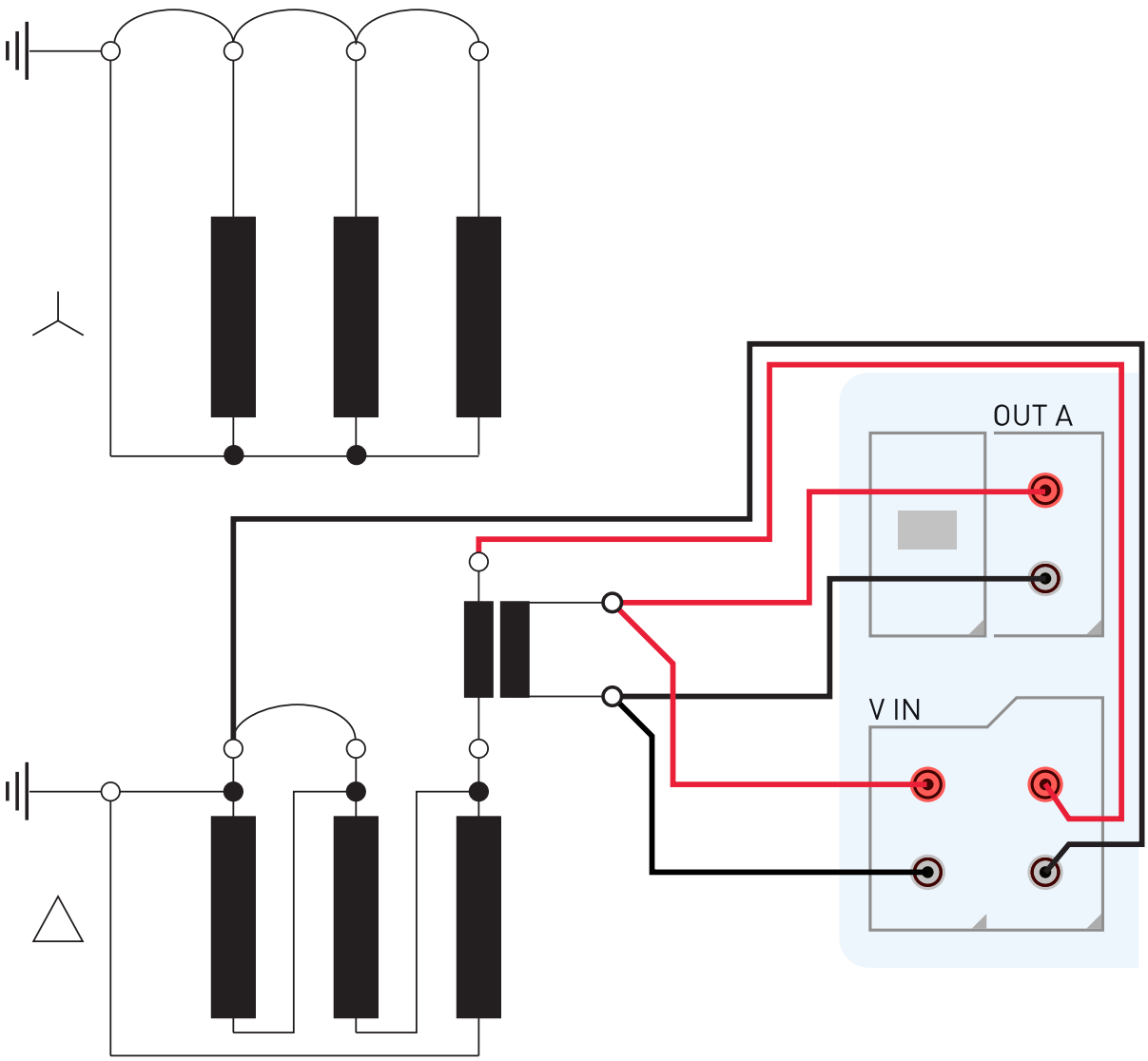

Figure 12-13: Bushing type CT located outside the delta winding current transformer

CTs located inside the delta winding

For current transformers that are integrated in the delta winding of the transformer, it is impossible to read the ratio directly because the delta winding acts as a voltage divider. In order to obtain the correct CT ratio, the ratio value determined by the *CPX 200* must be corrected.

For this purpose, *CPXpert* and *TouchControl* provide a **Delta compensation** field, where you can select the delta compensation factor depending on the bushing terminals that are used for primary signal measurement.

If it is possible to short-circuit the transformer winding at the same limb that the primary measurement is conducted on, the measurement should be performed with the winding short-circuited.

In this case, no delta compensation is required since the voltage induced in the transformer's secondary winding is zero, and thus the voltage induced on the primary side of the transformer is also zero. The delta compensation should be set to **1**.

This configuration is shown in the figure below: No delta compensation is required, as the main winding of the current transformer is short-circuited. This avoids the induction of flux in the main winding of the current transformer that could influence the measurement results.

For the measurement setup shown in the figure below, set the delta compensation to **1**.

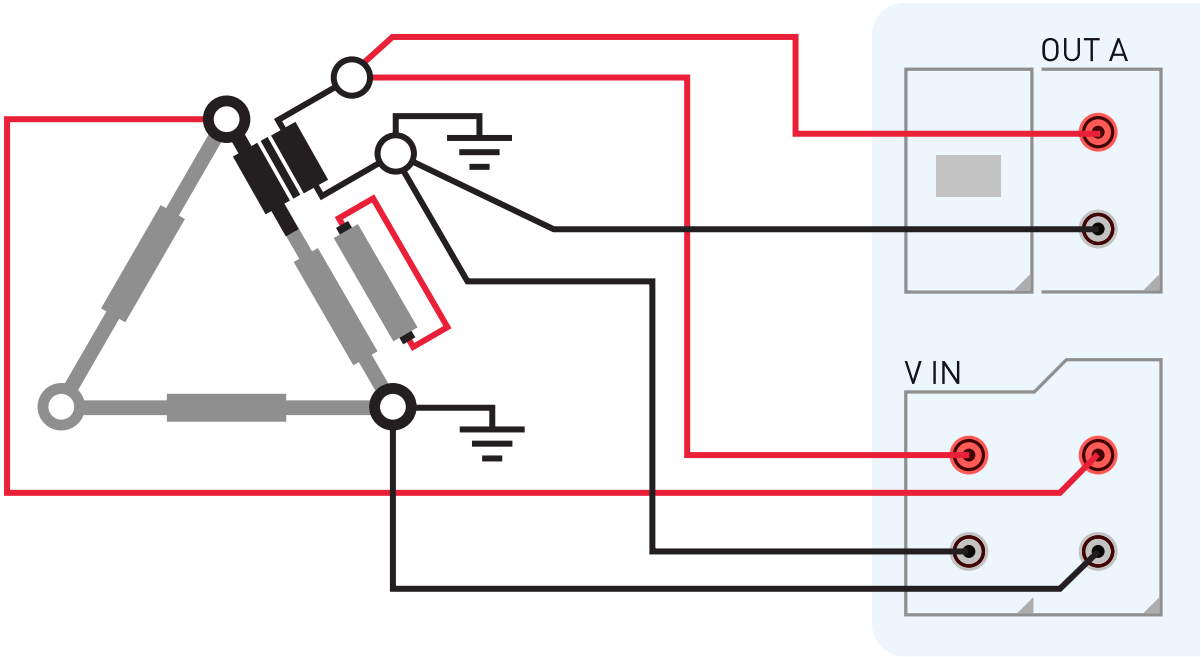

Figure 12-14: Measurement setup for **Delta compensation** = **1**

For the measurement setup shown in the figure below, set the delta compensation to **2/3**.

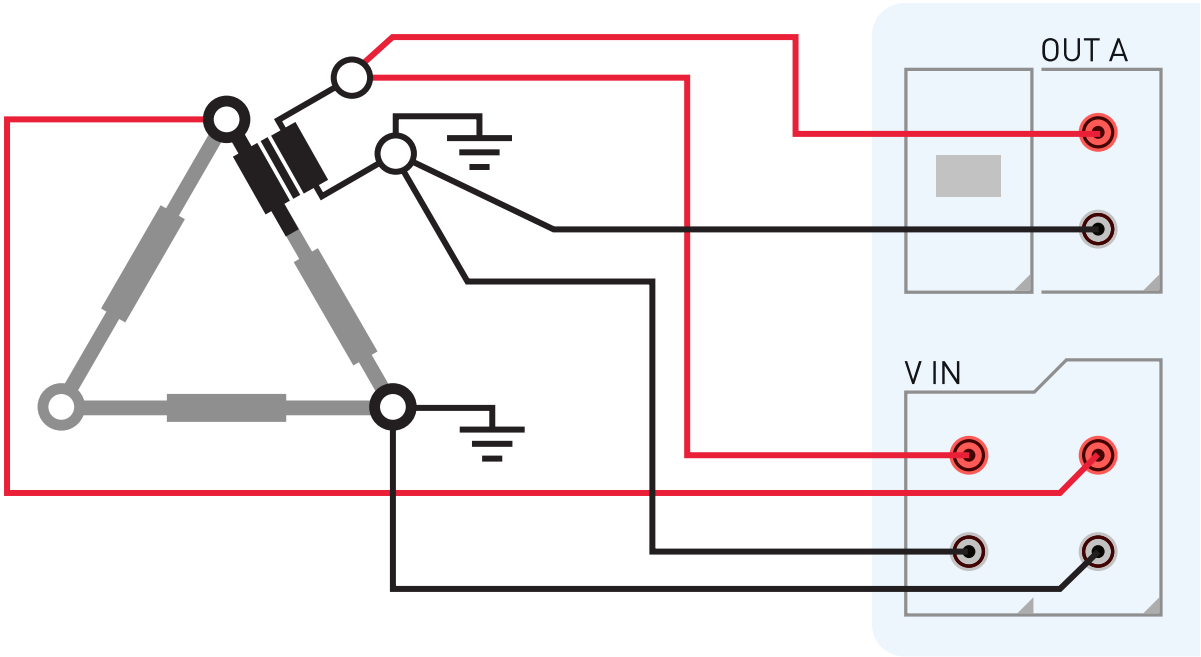

Figure 12-15: Measurement setup for **Delta compensation** = **2/3**

For the measurement setup shown in the figure below, set the delta compensation to **1/3**.

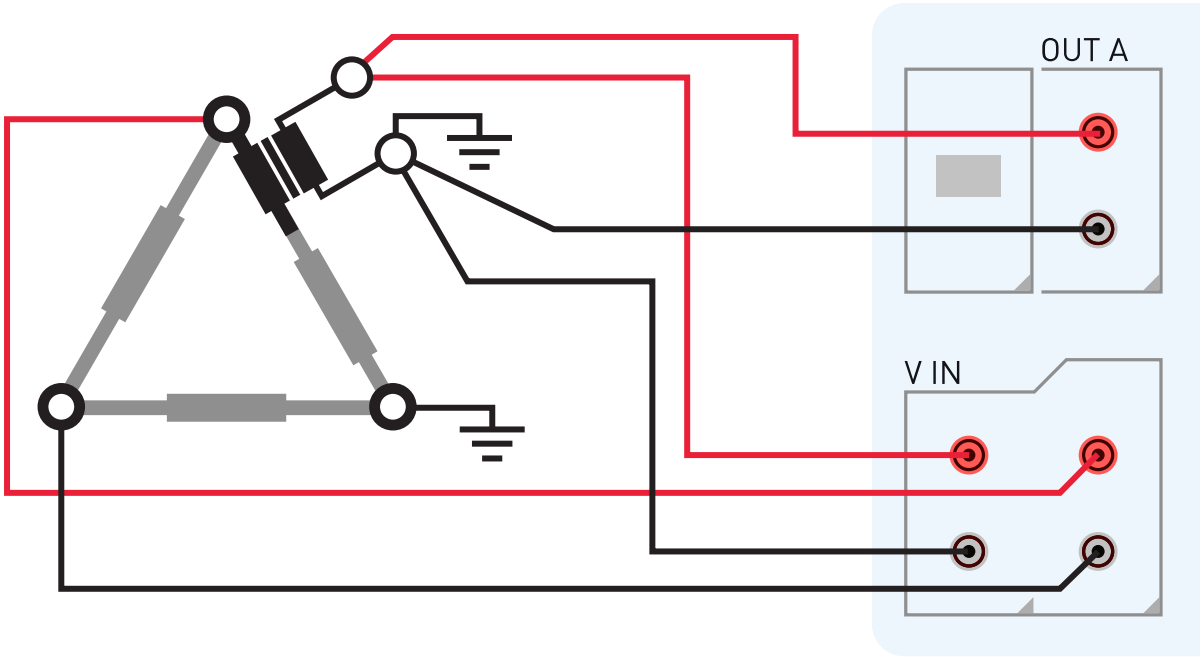

Figure 12-16: Measurement setup for **Delta compensation** = **1/3**

12.6 CT Polarity Check



With the **CT Polarity Check** measurement and the *CPOL* polarity checker, a series of test points can be checked for correct polarity without disconnecting the secondary side of the current transformer.
A saw-tooth signal with a different steepness for the rising and the falling slope is injected on the primary terminals. Incorrect wiring is detected when the saw-tooth signal shape is transposed on the secondary side.

In this manual, the *CPOL2* and *CPOL3* polarity checkers are collectively referred to as *CPOL*. The polarity checkers are named explicitly only if necessary due to their different features.

⚠ WARNING

Death or severe injury caused by high voltage or current possible

- ▶ Do not touch the test probe or the top part of the *CPOL* during measurements.
- ▶ Only touch and hold the device below the finger guard.

Note: During a measurement, OMICRON devices are the only permitted power source for the instrument transformer.

⚠ WARNING

Death or severe injury caused by high voltage or current possible

Feeding test voltage to a current transformer can cause dangerous voltages on other taps and/or cores of the current transformer.

- ▶ Do not touch other taps or windings of the current transformer during the measurement.
- ▶ When testing multi-core current transformers, make sure that no other windings of the current transformer are open.
- ▶ Leave the secondary windings of the other (non-measured) cores connected, or short-circuit them if the windings are open.

⚠ WARNING

Death or severe injury caused by high voltage or current possible

Accidentally mixing up primary and secondary windings can cause dangerous voltages and/or destroy the connected instrument transformer or the OMICRON equipment.

- ▶ Make sure that the injecting device output is connected to the correct side of the instrument transformer according to the wiring instructions in the dedicated user manual.

⚠ DANGER

Death or severe injury caused by high voltage or current

- Handle with extreme caution: The measurement circuit may carry dangerous voltages. Only touch the measurement setup with the *CPOL* measurement tips, and comply with the instructions stated in the relevant user manual.
- If you detect a wrong polarity in the current path, switch off the *CPX 200* first, and only then disconnect the terminals.
- Never operate the *CPOL* with an open battery compartment. A dangerous voltage level may occur in the battery compartment if the *CPOL*'s probe touches a test point with high-voltage potential.
- Do not use the *CPOL* during rain.
- Do not use the *CPOL* if it is damaged. Before use, inspect the case. Look for cracks or missing plastic. Pay particular attention to the insulation surrounding the connectors.
- Check the test leads and measurement tips for damaged insulation, exposed metal or bare wires before connecting them to the *CPOL*. Check the test leads for continuity. Replace damaged test leads immediately.
- If the test leads need to be replaced, only use test leads that meet the EN 61010-031 standard, rated at least for CAT II 1 000 V, CAT III 600 V, CAT IV 300 V, or better.
- When using test probes, keep your fingers behind the finger guards of the test probes. When using the measurement tip, keep your fingers behind the finger guard of the *CPOL*.
- To power the *CPOL*, only use 2 AA cell batteries, properly installed in the battery compartment.
- When using the *CPOL3*, do not apply more than the rated voltage for the applicable measurement category between a terminal and ground (CAT II 1 000 V, CAT III 600 V, or CAT IV 300 V). This also applies if test leads with a higher measurement category or voltage rating are used.
- Never leave the *CPOL3* under direct sunlight as it might heat up quickly. Check the permissible temperature range of the batteries in use. Operate and store the *CPOL3* only within the temperature range of the batteries in use.
- If the measurement is interrupted due to, for example, an unexpected loss of supply voltage or erroneous behavior of the *CPX 200*, do not touch the test setup until the energy has dissipated over time. Note that the length of time depends heavily on the test object.

NOTICE

Equipment damage possible

- Do not mix old and new batteries.
- Make sure that both batteries are of the same type.

For more information related to the **CT Polarity Check**, refer to the following sections:

- Safety (page 13)
- CPX 200 safety functions and components (page 20)
- Wiring and operation (page 84)
- Conventional current transformer (page 95)

12.6.1 Test setup

The following option is available for conducting **CT Polarity Check** measurements. The wiring diagram will adjust according to the following setting:

- **Output range**

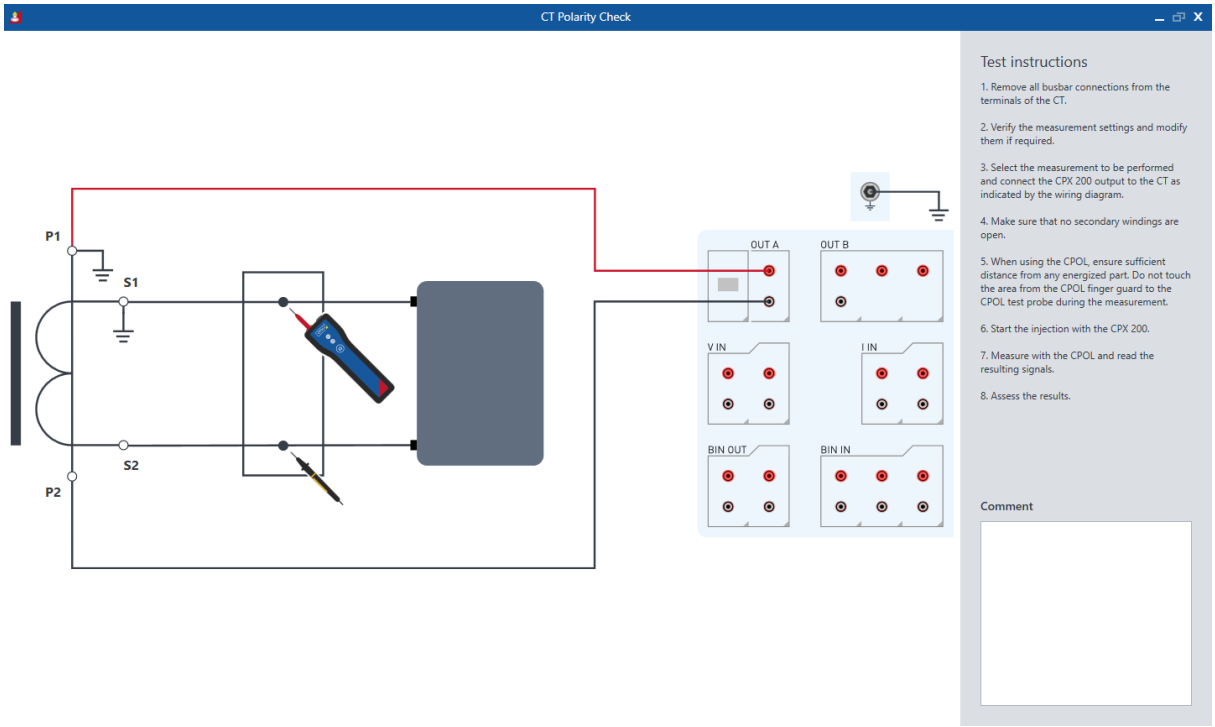

Figure 12-17: **CT Polarity Check** measurement using **OUT A** and the *CPOL*

It is sufficient to use moderate primary injected values to enhance the safe testing experience. The *CPOL* can measure accurately down to the µV-range, which can be achieved with a fraction of the 1 kA capability of the *CPX 200* or while using **OUT A**.

12.6.2 Settings and conditions

The following measurement settings and conditions are applicable for *CPXpert* as well as *TouchControl*.

Table 12-15: Available settings for the **CT Polarity Check**

Settings data	Description
Phases	Radio buttons for the selection between single-phase or three-phase measurements
Output range	The **Output range** determines the output that will be utilized. The available options are: • **16 A (OUT A)** • **32 A (OUT A)** • **1 kA (HC OUT)** **Note:** To use the **HC OUT** output, the *CPX 200* must be equipped with the **High Current Module**.
Test Current	Target test current
Continuous	**Default option:** • **Continuous** = **On** The *CPX 200* will continuously inject the saw-tooth cycle, until the measurement is manually deactivated by the user. **Alternative option:** • **Continuous** = **Off** Choosing the **Continuous** = **Off** option sets a pulse duty cycle for the output signal. For instance, a T on / T off ratio of 2 s / 9 s implies that the signal is activated for 2 seconds, followed by a pause of 9 seconds. This cycle then repeats itself.
T On	The time span when the signal is applied to the output
T Off	The time span when the signal output is paused

12.6.3 Measurement data

Table 12-16: Overview of the obtained measurement data in *CPXpert* and *TouchControl* for the **CT Polarity Check** test

Data	Description
Phase	Identification of the phase under test **Note:** The **Phase** field appears only when **Phases** = **3** is selected in the **Current transformer** tile.
Core	Identification of the current transformer core under test **Note:** Once the location field is populated with data, the selection will become locked.
Tap	Identification of the tap combination under test **Note:** Once the location field is populated with data, the selection will become locked.
Location	Location of the taken measurement result
Polarity	Polarity assessment with manual pass, manual investigate, manual fail and not rated options

12.6.4 Testing recommendation

Some self-supplied relays cause heavy distortions on the voltage as they are internally using a switched-mode power supply. *CPOL*, *CPOL2* and *CPOL3* are not able to detect such a distorted sawtooth signal. For *CPOL2* and *CPOL3*, a solution for this problem is using a current clamp to measure the current instead of the voltage (shown below).

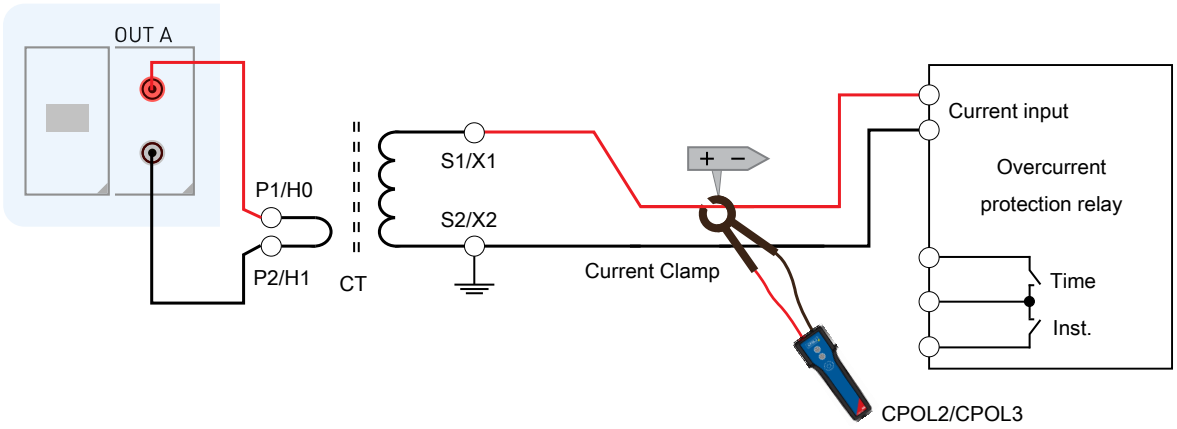

Figure 12-18: Polarity check on self-suplied relays

12.7 LPCT Ratio



An LPCT contains a built-in burden for providing an output voltage that is directly proportional to the primary current. For both protection and measurement only one transformer is required. A low-power current transformer provides a wide nominal current range and operates linearly and without saturation through the entire range up to the short-circuit current.

For the **LPCT Ratio** test to become available, the **Asset type** has to be set to **LPCT** in the **Asset view**.

⚠ DANGER

Death or severe injury caused by high voltage or current

Feeding test voltage to a tap of a current transformer can cause dangerous voltages on other taps and windings.

- ▶ Make sure that no secondary current transformer windings are open.
- ▶ If the measurement is interrupted due to, for example, an unexpected loss of supply voltage or erroneous behavior of the *CPX 200*, do not touch the test setup until the energy has dissipated over time. Note that the length of time depends heavily on the test object.

For more information related to the **LPCT Ratio** test, refer to the following sections:

- Safety (page 13)
- CPX 200 safety functions and components (page 20)
- Wiring and operation (page 84)
- Low-power current transformer (LPCT) (page 97)

12.7.1 Test setup

There are 2 options available for conducting **LPCT Ratio** measurements. The wiring diagram will adjust according to the following settings:

- **Output range**
- **Manual input (V in)**

The figure below illustrates a typical setup for an **LPCT Ratio** measurement. In this setup, the burden is connected to the secondary side of the current transformer, and the primary injection is carried out using the **High Current Module**.

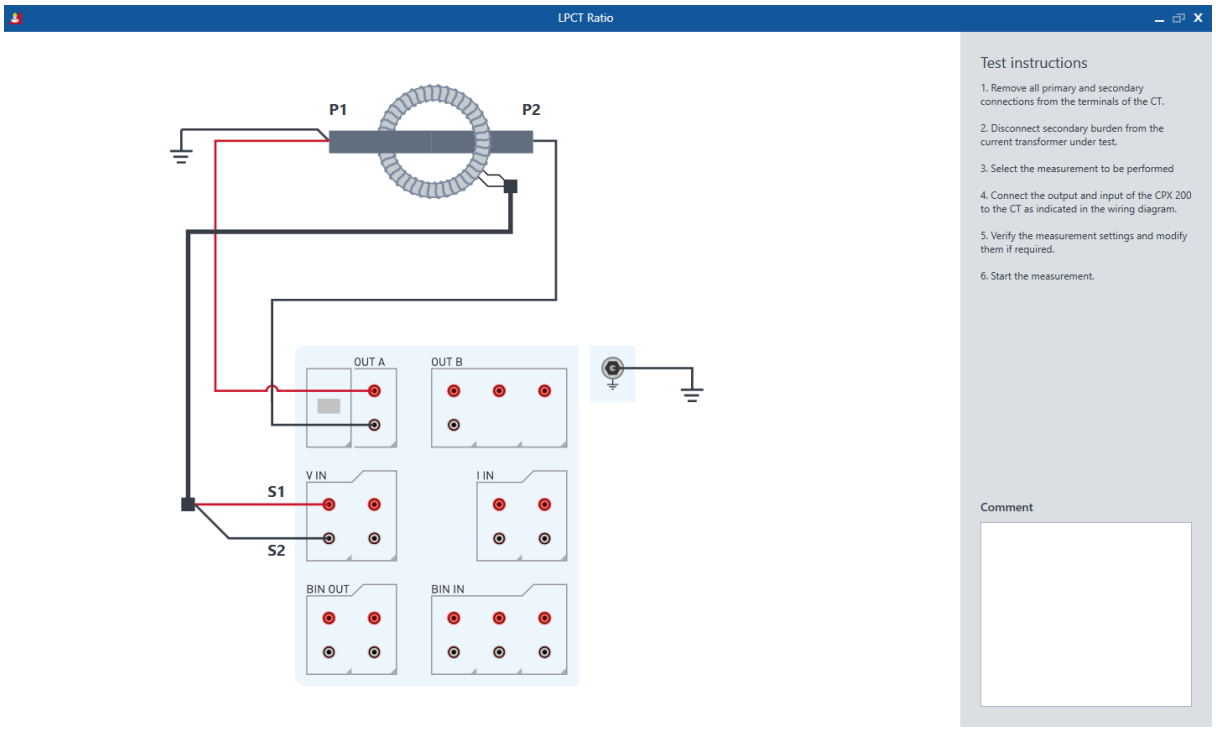

Figure 12-19: **LPCT Ratio** measurement using the **High Current Module** and **V IN1**

During operation, 1 of the 2 outer winding terminals (for example S1/X1 or S2/X2) per core is connected to ground potential. The wiring diagram consistently shows that S1/X1 and P1/H1 are grounded. It is recommended to maintain the existing grounded secondary terminal of the current transformer unchanged, therefore, P2/H2 and S2/X2 can also be grounded if applicable.

To ensure accurate measurements, it is important to maintain some distance between the voltage sensing test leads and the current injection test leads. If they are close together, measurement errors could arise from mutual coupling.
It is recommended to use coaxial cables for voltage sensing. These cables are shielded against external noise, thus providing more reliable and accurate measurement results.

When using longer high-current cables for the primary current transformer wiring, ensure that both cables are wired as closely together as possible in straight lines. The farther apart the cables are, the more compliance voltage is needed to compensate for the cable loop impedance. For minimum cable loop impedance, the cables can be twisted with each other.

Output range = HC OUT	**Output range = OUT A**
OK	OK
▶ Use 1 000 A **High Current Module** cables and coaxial cables	▶ Use 2 coaxial cables

Output range = HC OUT	Output range = OUT A
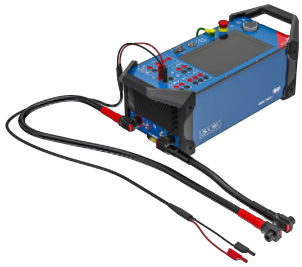	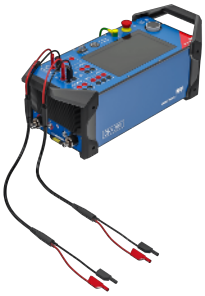
Do not use!	Do not use!
▶ Do not keep 1 000 A **High Current Module** cables and test leads too close together or overlapping	▶ Do not use a multi-asset cable.
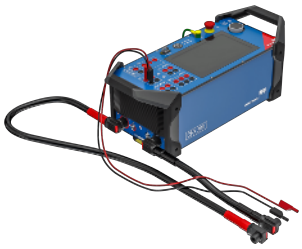	

12.7.2 Settings and conditions

The following measurement settings and conditions are applicable for *CPXpert* as well as *TouchControl*.

Table 12-17: Available settings for the **LPCT Ratio** test

Settings data	Description
Test frequency	Target test frequency. By default, this frequency is set to match the rated frequency of the current transformer.
Auto keep	**Default option:** • **Auto keep** = **On** By default, **Auto keep** is enabled. This means that the *CPX 200* will automatically record measurement results when stable measurement conditions have been achieved. **Alternative option:** • **Auto keep** = **Off** In this mode, the operator has the flexibility to record the measurement results when they deem appropriate, using the **Keep** button located in the **Live bar**.
Output range	The output range determines the output that will be utilized. The available options are: • **1 kA (HC OUT)** • **70 A (OUT A)** • **35 A (OUT A)** • **8 A (OUT A)** **Note:** To use the **HC OUT** output, the *CPX 200* must be equipped with the **High Current Module**.
Manual input (V in)	**Default option:** • **Manual input (V in)** = **Off** In this mode, the voltage across the test burden in the field **V in** is measured using the **V IN1** input. **Alternative option:** • **Manual input (V in)** = **On** In this mode, the voltage across the burden in the field **V in** is manually entered.

12.7.3 Measurement data

Table 12-18: Measurement data for the **LPCT Ratio** test

Data	Description
I test	Target test current
I out	Measured current at the primary side of the current transformer based on **OUT A** or **HC OUT**
V in	Measured secondary voltage of the current transformer based on **V in**
I' in	Calculated secondary current based on **V in** and **I pr**
Ratio	Calculated ratio of the current transformer[1] $Ratio = \frac{I_{out}}{V_{in}} \times CF_I$
Ratio error	Calculated ratio error[2] $\varepsilon = \frac{K_N \times V_{in} \times CF_I - I_{out}}{I_{out}} \times 100\,\%$
Phase error	Calculated phase error[3] $\varphi = \varphi I_{in} - \varphi I_{out} - \varphi PhaseCorrection$
Polarity	Polarity status **Correct**: -45° ≤ $I_{in\ phase}$ - $I_{out\ phase}$ ≤ 45 ° **Reversed**: All other cases
Assessment	Assessment of the measurement point

1 CF_I stands for the amplitude correction. By default, it is set to 1.00 and subsequently no additional ratio error is considered.

2 Kn = rated current transformer ratio, here: I_{out} / V_{in}

3 By default, the phase correction is set to 0.0000° and subsequently no additional phase error is considered.

13 Voltage Transformer

This section lists the voltage transformer tests available for the *CPX 200* in both *CPXpert* and *TouchControl*.

▶ For details on safely performing tests, refer to Safety instructions (page 14) and Wiring and operation (page 84).

13.1 VT Ratio



The **VT Ratio** measurement is performed as a functional test of the voltage transformer performance during manufacturing, factory acceptance, as part of commissioning tests, or as a performance test after an outage. The measured voltage transformer ratio is compared with the design and nameplate specifications and to previous measurement results. The error can be calculated for each testing point. Deviations from the specifications may indicate internal faults such as open or short circuits or faults during production. Ratio errors may cause a malfunction of protection and false interpretation of the system voltage/current.

⚠ DANGER

Death or severe injury caused by high voltage or current

- ▶ Do not connect any *CPX 200* output to the secondary side of the voltage transformer. This will cause dangerous voltages on the primary side.
- ▶ Ensure that any delta windings are disconnected from the voltage transformer under test. Failure to do so may result in the primary voltage injection inadvertently channeling power into other phases via connected delta windings, thereby creating a risk of circuits becoming energized.
- ▶ Do not exceed the rated voltage of the test object.
- ▶ Specify **U pr** and **U sr** correctly before starting the measurement to prevent overvoltage injection.
- ▶ Ensure that the *HVX10*'s **HV OUT** voltage does not exceed the 300 V_{AC} input limit of the *HVX10*, when divided by the nominal ratio of the test object.
- ▶ Make sure that no secondary windings are short-circuited.
- ▶ Never use the *HVX10* without a solid connection to ground with at least 6 mm^2.
- ▶ Use a ground point as close as possible to the test object.
- ▶ Make sure to position the test object in the danger zone.
- ▶ If applicable, solidly ground the test object.

⚠ DANGER

Death or severe injury caused by high voltage or current

The high-voltage cable is shielded and therefore safe. However, the yellow highlighted 50 cm (20 inches) of this cable have no shield.

- ▶ Avoid any direct contact of this part of the cable to ground potential and any objects.
- ▶ During a test, consider this part of the cable a live wire and life threatening.

For more information related to the **VT Ratio** test, refer to the following sections:

- Safety (page 13)
- CPX 200 safety functions and components (page 20)
- HVX10 safety functions and components (page 36)
- Wiring and operation (page 84)
- Transportation of the CPX 200 and the HVX10 (page 39)
- Voltage transformer (page 99)

13.1.1 Test setup

The following option is available for conducting **VT Ratio** measurements. The wiring diagram will adjust according to the following setting:

- **Output range**

The figure below illustrates a typical setup for a **VT Ratio** measurement. In this setup, the burden is connected to the secondary side of the voltage transformer, and the primary injection is carried out using **HV OUT**.

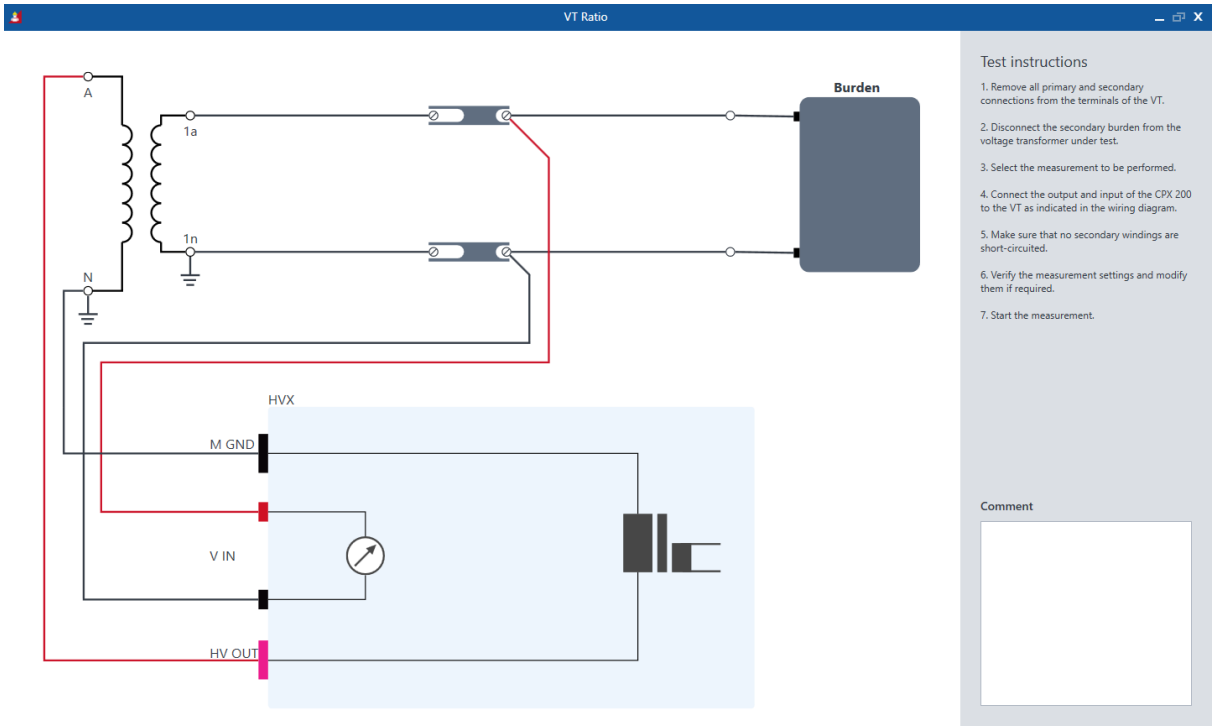

Figure 13-1: **VT Ratio** measurement using *HVX10* with **HV OUT** and **V IN**

⚠ WARNING

Death or severe injury caused by high voltage or current possible

While performing measurements on combined current and voltage transformers, dangerous voltages may occur at the current transformer terminals.

- ▶ When testing combined current and voltage transformers, make sure that no CT secondary windings are open. Short-circuit the CT secondary windings manually.
- ▶ Make sure that all secondary VT windings are open.

13.1.2 Settings and conditions

The following measurement settings and conditions are applicable for *CPXpert* as well as *TouchControl*.

Table 13-1: Overview of the available settings within *CPXpert* and *TouchControl* for the **VT Ratio** test

Settings data	Description
Windings	This setting specifies the number of windings of the voltage transformer. The valid options are defined in the **Winding** field of the measurement data, based on the selection made.
Output range	The **Output range** determines the output that will be used. The available options are: • **300 V (OUT B1)** • **10 kV (HV OUT)** **Note:** To use the **HV OUT** output, the *CPX 200* must be connected to the *HVX10*.
Frequency	Target test frequency. By default, this frequency is set to match the rated frequency of the voltage transformer.

13.1.3 Measurement data

Table 13-2: Measurement data for the **VT Ratio** test

Data	Description
Winding	Identification of the winding under test
V test	Target voltage on the primary side of the voltage transformer
V out	Measured burden voltage based on **OUT A**
V in	Measured burden voltage based on **V IN**
Ratio	Calculated ratio of the voltage transformer $Ratio = \frac{K_N \times V_{in} - V_{out}}{V_{out}} \times 100\,\%$ Kn = rated current transformer ratio, here: V out / V in
Ratio error	Deviation of the measured ratio from the rated ratio.
Phase error	Measured phase error between the primary and secondary voltage.
Polarity	Polarity status **Correct**: -45° ≤ $V_{\text{in phase}}$ - $V_{\text{in phase}}$ ≤ 45 ° **Reversed**: All other cases
Assessment	Assessment of the measurement point

13.2 VT Burden



VT Burden measures the total secondary load of a voltage transformer in VA, including the wires from the voltage transformer to the burden and the burden itself. Knowing the exact operating burden is crucial for ensuring correct and accurate voltage transformer operation.

To measure a voltage transformer's secondary burden, use the VT Burden test. This involves injecting voltage on the VT's secondary side up to the rated nominal voltage of the burden with **OUT A**.

⚠ WARNING

Death or severe injury caused by high voltage or current possible

- ▶ Make sure that the terminals of the burden to be connected to the *CPX 200* do not carry any voltage potential.
- ▶ During a test, the *CPX 200* is the only permitted signal source on the burden.
- ▶ Make sure that the high-voltage terminal H1/A of the voltage transformer is connected to ground.
- ▶ Disconnect the burden from the secondary winding of the voltage transformer before starting the burden test and make sure that it is properly grounded.

⚠ WARNING

Do not exceed the voltage specification of the burden.

NOTICE

Falsification of measurement results possible

It is important to disconnect the voltage transformer under test prior to the burden test.

- ▶ If you do not disconnect the voltage transformer for the burden test, the *CPX 200* measures the parallel impedance of the burden and the voltage transformer winding instead of the burden itself. Although in many cases the impedance of the voltage transformer is many times higher than the burden impedance, this will cause a measuring error.
- ▶ The *CPX 200* does not perform demagnetization after burden measurement. Therefore, voltage transformer saturation could occur if you do not disconnect the voltage transformer prior to the burden test.

For more information related to the **VT Burden** test, refer to the following sections:

- Safety (page 13)
- CPX 200 safety functions and components (page 20)
- Wiring and operation (page 84)
- Voltage transformer (page 99)

13.2.1 Test setup

The figure below illustrates a typical setup for **VT Burden** measurement.

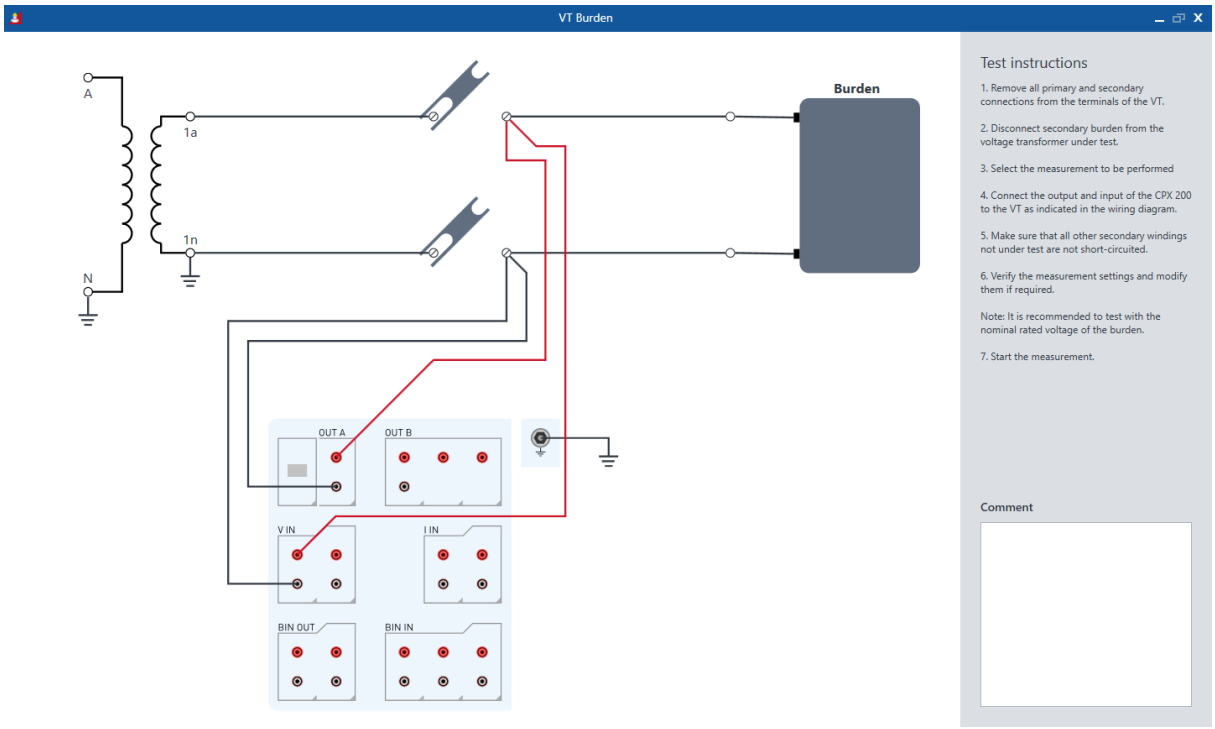

Figure 13-2: **VT Burden** measurement wiring using **OUT A** and **V IN1**

13.2.2 Settings and conditions

The following measurement settings and conditions are applicable for *CPXpert* as well as *TouchControl*.

Table 13-3: Overview of the available settings within *CPXpert* and *TouchControl* for the **VT Burden** test

Settings data	Description
Windings	This setting specifies the number of windings of the voltage transformer. The valid options are defined in the **Winding** field of the measurement data, based on the selection made.
Frequency	Target test frequency. By default, this frequency is set to match the rated frequency of the voltage transformer.

13.2.3 Measurement data

Table 13-4: Measurement data for the **VT Burden** test

Data	Description
Winding	Identification of the windings under test
V test	Target voltage
V in	Measured or entered secondary voltage on the burden via **V IN1**
I out	Measured burden current based on **OUT A**
Z	Measured burden impedance
Z Phase	Measured burden phase angle
Burden	Burden measured in VA, related to the rated secondary voltage of the voltage transformer $Burden = U_{sr} \times \left(I_{out} \times \frac{U_{sr}}{V_{in}} \right)$
cos φ	Cosine of phase angle φ
Assessment	Assessment of the measurement point

13.3 VT Polarity Check



With the **VT Polarity Check** measurement and the *CPOL* polarity checker, a series of test points can be checked for correct polarity without disconnecting the secondary side of the voltage transformer.
A saw-tooth signal with a different steepness for the rising and the falling slope is injected on the primary terminals. Incorrect wiring is detected when the saw-tooth signal shape is transposed on the secondary side.

In this manual, the *CPOL2* and *CPOL3* polarity checkers are collectively referred to as *CPOL*. The polarity checkers are named explicitly only if necessary due to their different features.

⚠ WARNING

Death or severe injury caused by high voltage or current possible

- ▶ Do not touch the test probe or the top part of the *CPOL* during measurements.
- ▶ Only touch and hold the device below the finger guard.

Note: During a measurement, OMICRON devices are the only permitted power source for the voltage transformer.

⚠ WARNING

Death or severe injury caused by high voltage or current possible

The voltage transformer (VT) can explode when it is short-circuited while it is in service.

- ▶ Ensure that the VT is not in service during the injection of signals on the secondary side and that the primary side is safely disconnected.
- ▶ Do not inject signals if it is not possible to open the fuse / miniature circuit breaker (MCB). Before injecting voltage on the secondary side of the VT, make sure that the fuse/MCB on the secondary side of the VT is open and that you inject the voltage on the burden side of the fuse/MCB.

⚠ WARNING

Death or severe injury caused by high voltage or current possible

Accidentally mixing up primary and secondary windings can cause dangerous voltages and/or destroy the connected instrument transformer or the OMICRON equipment.

- ▶ Make sure that the injecting device output is connected to the correct side of the instrument transformer according to the wiring instructions in the dedicated user manual.

⚠ DANGER

Death or severe injury caused by high voltage or current

- Handle with extreme caution: The measurement circuit may carry dangerous voltages. Only touch the measurement setup with the *CPOL* measurement tips, and comply with the instructions stated in the relevant user manual.
- If you detect a wrong polarity in the current path, switch off the *CPX 200* first, and only then disconnect the terminals.
- Never operate the *CPOL* with an open battery compartment. A dangerous voltage level may occur in the battery compartment if the *CPOL*'s probe touches a test point with high-voltage potential.
- Do not use the *CPOL* during rain.
- Do not use the *CPOL* if it is damaged. Before use, inspect the case. Look for cracks or missing plastic. Pay particular attention to the insulation surrounding the connectors.
- Check the test leads and measurement tips for damaged insulation, exposed metal or bare wires before connecting them to the *CPOL*. Check the test leads for continuity. Replace damaged test leads immediately.
- If the test leads need to be replaced, only use test leads that meet the EN 61010-031 standard, rated at least for CAT II 1 000 V, CAT III 600 V, CAT IV 300 V, or better.
- When using test probes, keep your fingers behind the finger guards of the test probes. When using the measurement tip, keep your fingers behind the finger guard of the *CPOL*.
- To power the *CPOL*, only use 2 AA cell batteries, properly installed in the battery compartment.
- When using the *CPOL3*, do not apply more than the rated voltage for the applicable measurement category between a terminal and ground (CAT II 1 000 V, CAT III 600 V, or CAT IV 300 V). This also applies if test leads with a higher measurement category or voltage rating are used.
- Never leave the *CPOL3* under direct sunlight as it might heat up quickly. Check the permissible temperature range of the batteries in use. Operate and store the *CPOL3* only within the temperature range of the batteries in use.

⚠ DANGER

Death or severe injury caused by high voltage or current

- Never use the *HVX10* without a solid connection to ground with at least 6 mm^2.
- Use a grounding point as close as possible to the test object.
- Make sure to position the test object in the danger zone.

⚠ DANGER

Death or severe injury caused by high voltage or current

The high-voltage cable is shielded and therefore safe. However, the 50 cm (20 in) of this cable highlighted in yellow have no shield.

- ▶ Avoid any direct contact of this part of the cable to ground potential and any objects.
- ▶ During a test, consider this part of the cable a live wire and life threatening.

NOTICE

Equipment damage possible

- ▶ Do not mix old and new batteries.
- ▶ Make sure that both batteries are of the same type.

For more information related to the **VT Polarity Check** test, refer to the following sections:

- Safety (page 13)
- CPX 200 safety functions and components (page 20)
- HVX10 safety functions and components (page 36)
- Wiring and operation (page 84)
- Transportation of the CPX 200 and the HVX10 (page 39)
- Voltage transformer (page 99)

13.3.1 Test setup

The following option is available for conducting voltage transformer polarity check measurements. The wiring diagram will adjust according to the following setting:

- **Output range**

The figure below illustrates a typical setup for a **VT Polarity Check** measurement. In this setup, the burden is connected to the secondary side of the voltage transformer, and the primary injection is carried out by using **OUT A**, **OUT B1**, or **HV OUT**.

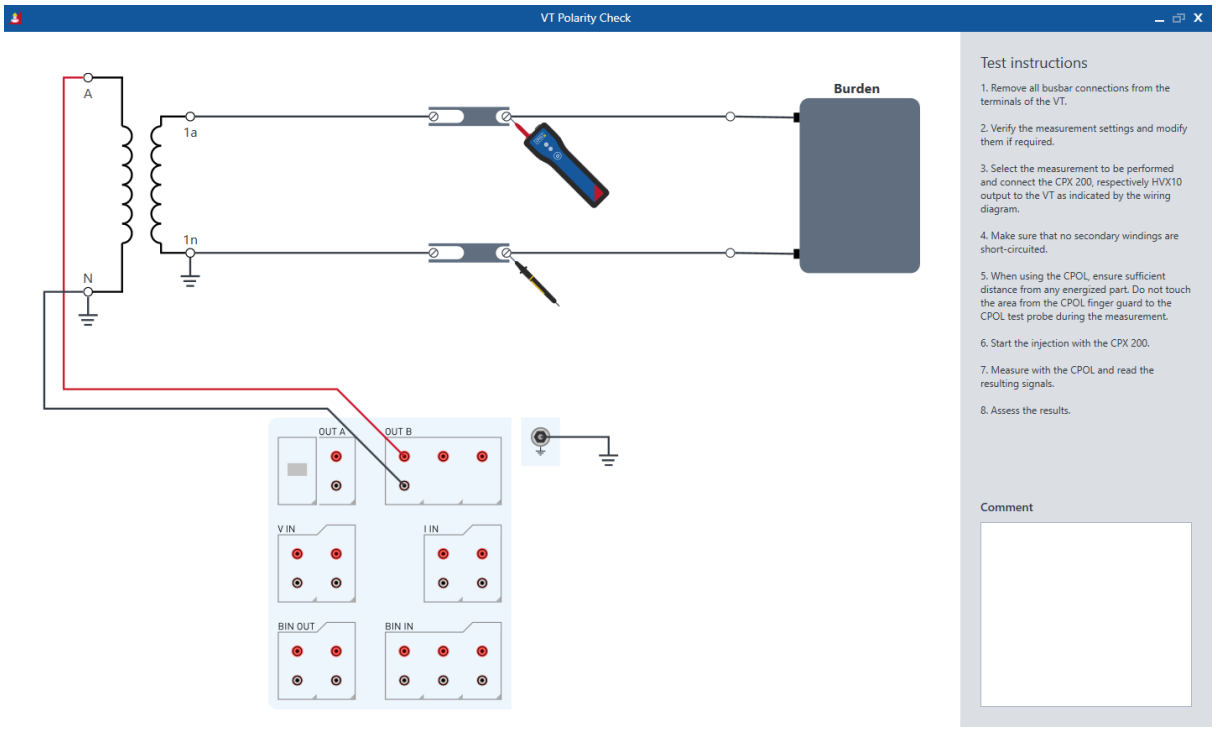

Figure 13-3: **VT Polarity Check** measurement using **OUT B1** and the *CPOL*

It is sufficient to use moderate primary injected values to enhance a safe testing experience. The *CPOL* can measure accurately down to the µV-range, which can be achieved with a fraction of the 10 kV capability of the *HVX10*.

13.3.2 Setttings and conditions

The following measurement settings and conditions are applicable for *CPXpert* as well as *TouchControl*.

Table 13-5: Available settings for the **VT Polarity Check** test

Settings data	Description
Windings	This setting specifies the number of windings of the voltage transformer. The valid options are defined in the **Winding** field of the measurement data, based on the selection made.

Settings data	Description
Output range	The **Output range** determines the output that will be used. The available options are: • **42 V (OUT A)** • **85 V (OUT A)** • **300 V (OUT B1)** • **300 V (OUT B2)** • **300 V (OUT B3)** • **5 kV (HV OUT)** **Note:** To use the **HV OUT** output, the *CPX 200* must be connected to the *HVX10*.
Continuous	**Default option:** • **Continuous** = **On** The *CPX 200* will continuously inject the saw-tooth cycle, until the measurement is manually deactivated by the user. **Alternative option:** • **Continuous** = **Off** Choosing the **Continuous** = **Off** option sets a pulse duty cycle for the output signal. For instance, a T on / T off ratio of 2 s / 9 s implies that the signal is activated for 2 seconds, followed by a pause of 9 seconds. This cycle then repeats itself.
T On	Time span when the signal is applied to the output
T Off	Time span when the signal output is paused

13.3.3 Measurement data

Table 13-6: Overview of the obtained measurement data in *CPXpert* and *TouchControl* for the **VT Polarity Check** test

Data	Description
Winding	Identification of the voltage transformer winding under test **Note:** Once the location field is populated with data, the selection will become locked.
Location	Location of the taken measurement result
Polarity	Polarity assessment with manual pass, manual investigate, manual fail, and not rated options

14 Power Transformer

This section lists the power transformer tests available for the *CPX 200* in both *CPXpert* and *TouchControl*.

▶ For details on safely performing tests, refer to Safety instructions (page 14) and Wiring and operation (page 84).

14.1 TR Winding DF/PF & C



The **TR Winding DF/PF & C** test measures the winding-winding as well as the winding-phase insulation within a power transformer. Utilizing the optimized sweep of the *HVX10* allows to inspect insulation properties as well as the winding condition, such as displacement or change in geometry as well as core properties such as deformation.

This test is only available in *CPXpert*.

The test name and assessment parameters depend on the selected standard in *CPXpert*:
• IEC: **TR Winding DF/PF & C**
• IEEE: **TR Overall DF/PF & C**

Depending on the **Loss Index** setting (→ General (page 52)), either **DF** or **PF** is added to the test name.

In this section, the IEC naming conventions will be used.

The **TR Winding DF/PF & C** measurement can be performed by using the *CPX 200* and the *HVX10*.

Before setting the *CPX 200* and the *HVX10* into operation and carrying out a test, it is essential that you have read and understood the following sections and chapters:

- Safety (page 13)
- CPX 200 safety functions and components (page 20)
- HVX10 safety functions and components (page 36)
- Wiring and operation (page 84)
- Power transformer (page 89)
- Connecting the HVX10 to the CPX 200 (page 37)
- Assessment rules (page 62)
- OMICRON Support (page 280)

⚠ DANGER

Death or severe injury caused by high voltage or current

- ▶ Never use the *HVX10* without a solid connection to ground with at least 6 mm^2.
- ▶ If applicable, solidly ground the test object. Use a grounding point as close as possible to the test object.
- ▶ Make sure to position the test object in the danger zone with appropriate distances to the work area.
- ▶ If the measurement is interrupted due to, for example, an unexpected loss of supply voltage or erroneous behavior of the *CPX 200* do not touch the test setup until the energy has dissipated over time. Note that the length of time depends heavily on the test object.

⚠ DANGER

Death or severe injury caused by high voltage or current

The high-voltage cable is shielded and therefore safe. However, the 50 cm (20 in) of this cable highlighted in yellow have no shield.

- ▶ Avoid any direct contact of this part of the cable to ground potential and any objects.
- ▶ During a test, consider this part of the cable a live wire and dangerous.

⚠ DANGER

Death or severe injury caused by high voltage or current

Bushing C1 and C2 capacitance form a capacitive voltage divider. Applying test voltage with open bushing taps can lead to heavy arcing and destruction of the insulation.

- ▶ Never leave any bushing measurement or test tap open during operation.

14.1.1 Test setup

A **TR Winding DF/PF & C** test is recommended when the insulation medium contains fluids such as mineral or ester oils. For dry-type transformers, a partial discharge measurement is recommended to evaluate the insulation characteristics.

An insulation resistance test can be performed using the same setup as the **TR Winding DF/PF & C** test.

The **TR Winding DF/PF & C** test is sequential. The test voltage is applied to each winding separately. Typically, the first measurement is performed with **HV OUT** connected to the short-circuited high-voltage winding, while all other windings are separately short-circuited and connected to **I IN A** (for example, the low-voltage winding) or **I IN B** (for example, the tertiary winding). After the initial set of measurements, the **HV OUT** wiring is swapped with **I IN A**, and the injection is performed on the second winding. For the tertiary winding, this step is repeated, with **HV OUT** swapped with the **I IN B** wiring on the transformer.

The wiring diagram will adjust according to the following settings:

- **Winding under test**
- **Vector group**

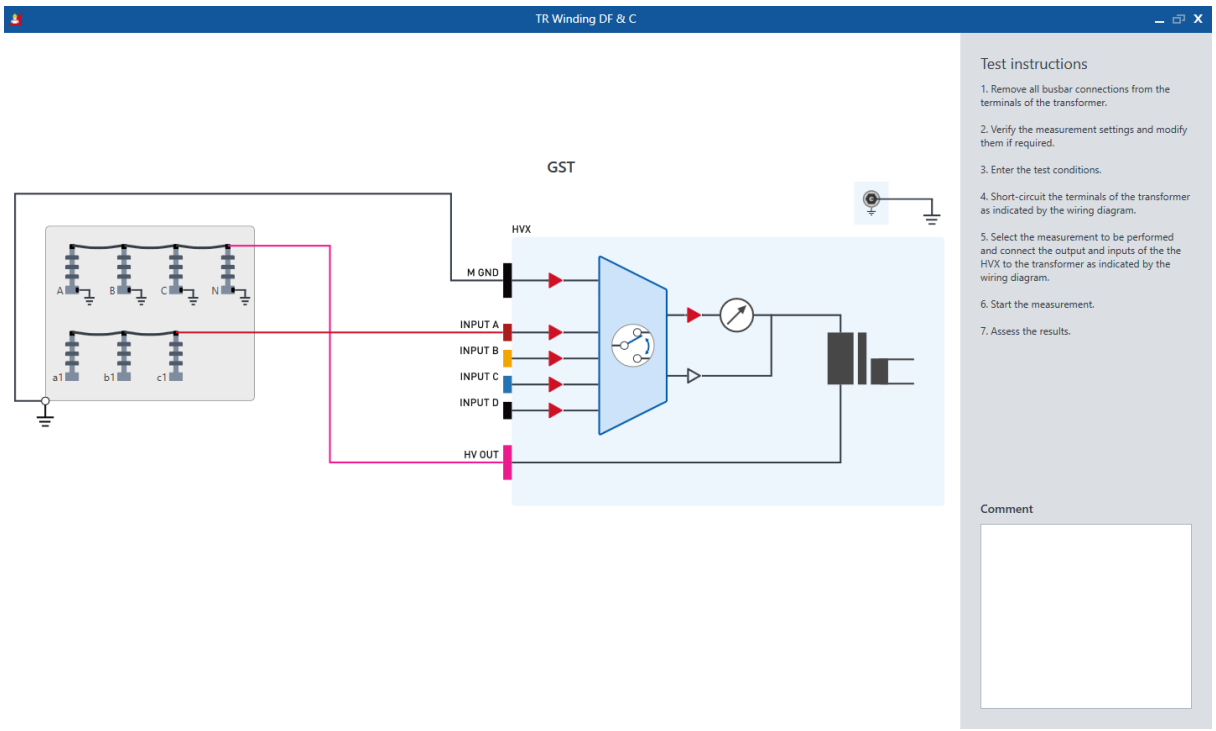

Figure 14-1: **TR Winding DF/PF & C** test for a two-winding transformer

14.1.1.1 Two-winding transformer

A two-winding power transformer with high- and low-voltage windings provides 3 different insulations which can be measured (see the figure below): Insulation C_{HL} between the high- and the low-voltage windings, insulation C_H between the high-voltage winding and ground and insulation C_L between the low-voltage winding and ground.

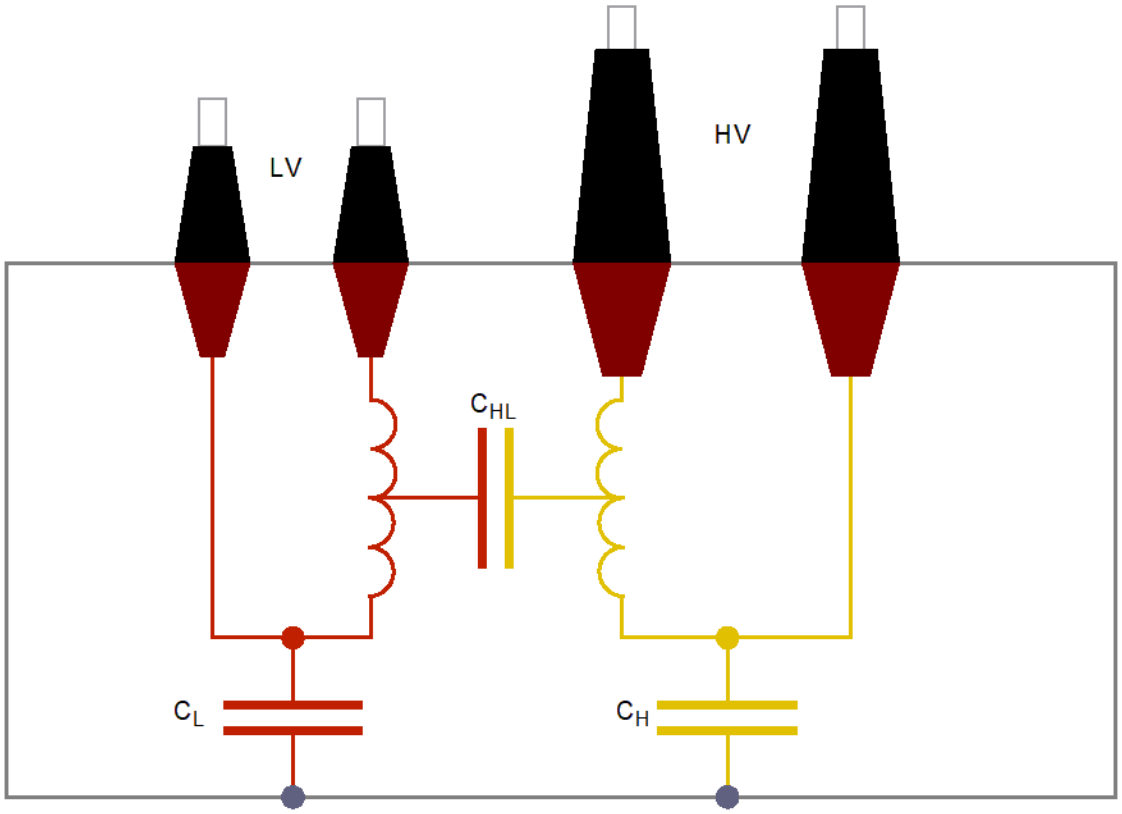

Figure 14-2: Insulations of a two-winding power transformer

In case of core type transformers, insulation C_{HL} is made of barriers and spacers which give it mechanical strength and enable oil flow to cool the windings. Compared to the other insulation parts, insulation C_{HL} contains the highest amount of paper.

Insulation C_H, insulating the high-voltage windings from the tank, mainly consists of oil. The paper influence usually mainly comes from parts of the clamping construction.

Insulation C_L, insulating the low-voltage windings from the core, also consists of oil and paper but there usually is much less paper present than in the C_{HL} insulation.

Dielectric testing on a two-winding power transformer evaluates the 3 insulation types: C_{HL}, C_H and C_L.

Table 14-1: Capacitance and Dissipation/Power Factor test configuration for a two-winding power transformer

HV OUT	Result	Mode	INPUT A	M GND
HV	C_{HL}	**UST - A**	Measured	Guarded
	C_H	**GSTg - A+B+C+D**	Guarded	Measured
	$C_{HL} + C_L$	**GST**	Measured	Measured

HV OUT	Result	Mode	INPUT A	M GND
LV	C_{LH}	**UST - A**	Measured	Guarded
	C_L	**GSTg - A+B+C+D**	Guarded	Measured
	$C_{L+}C_{LH}$	**GST**	Measured	Measured

For dielectric measurements on a two-winding power transformer, the procedure begins with the initial sequence of voltage injection at the short-circuited high-voltage terminals. The response is then measured across the short-circuited low-voltage terminals via **INPUT A** of the *HVX10* and ground as outlined in the figure below.

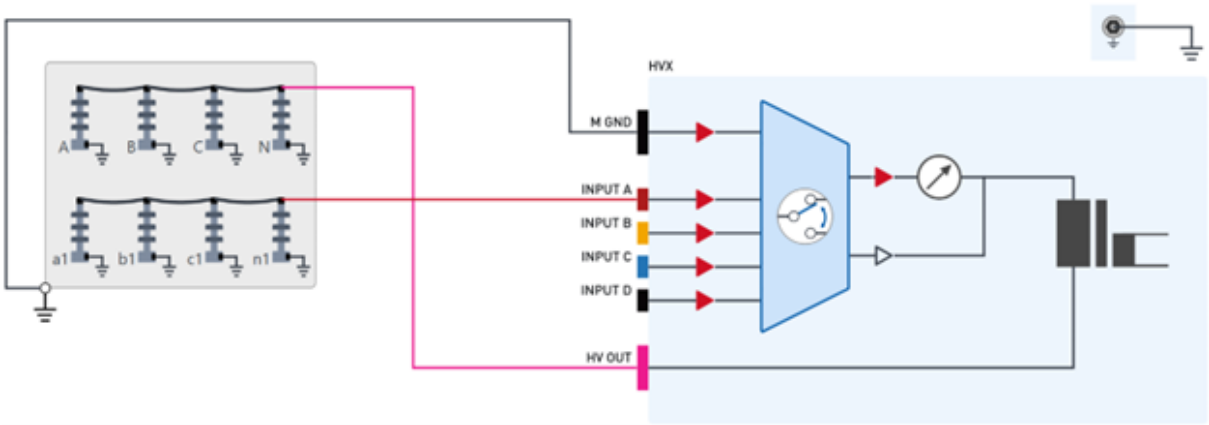

Figure 14-3: *HVX10* connected to a two-winding power transformer for measuring C_{HL} and C_H

Applying a 10 kV voltage to the primary terminals and utilizing **GST** mode for measurement allows for the acquisition of the combined capacitance and dissipation/power factor for both C_{HL} and C_H. Following this, the measurement mode is altered to **GSTg - A+B+C+D**, isolating the measurement to the capacitance of C_H alone. The concluding part of the first measurement block is dedicated to accurately determining the value of C_{HL}.

After completing the initial measurements, the *HVX10* will be set to the **SAFE** state, as indicated on the *CPX 200* front panel. This is a preparatory step to allow reconfiguration of the connections for injecting voltage into the low-voltage terminals and measuring the return over the high-voltage terminals and ground, essentially reversing the wiring setup as shown in the figure below. The first measurement in this new configuration aims to determine the values of C_L and C_{LH} in **GST** mode. The second sequence involves switching to **GSTg - A+B+C+D** mode to measure the capacitance of CL exclusively. The final step in this sequence is to measure C_{LH} in **UST - A** mode.

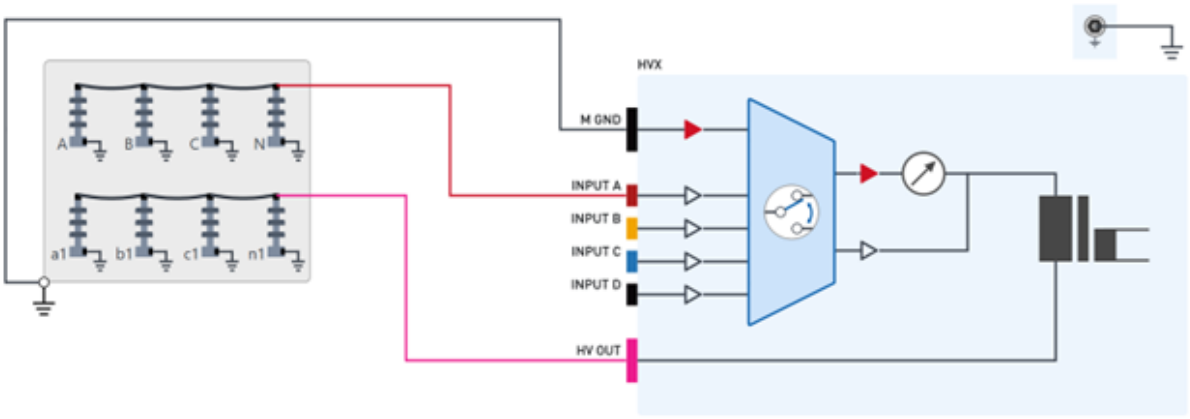

Figure 14-4: *HVX10* connected to a two-winding power transformer for measuring CHL and CL

14.1.1.2 Three-winding transformer

In a three-winding power transformer there are 2 parts of insulation which are formed by barriers and spacers: C_{HL} and C_{LT} between the low- and tertiary-voltage windings (see the figure below). Both insulation parts are similar in construction to C_{HL} in a two-winding power transformer.

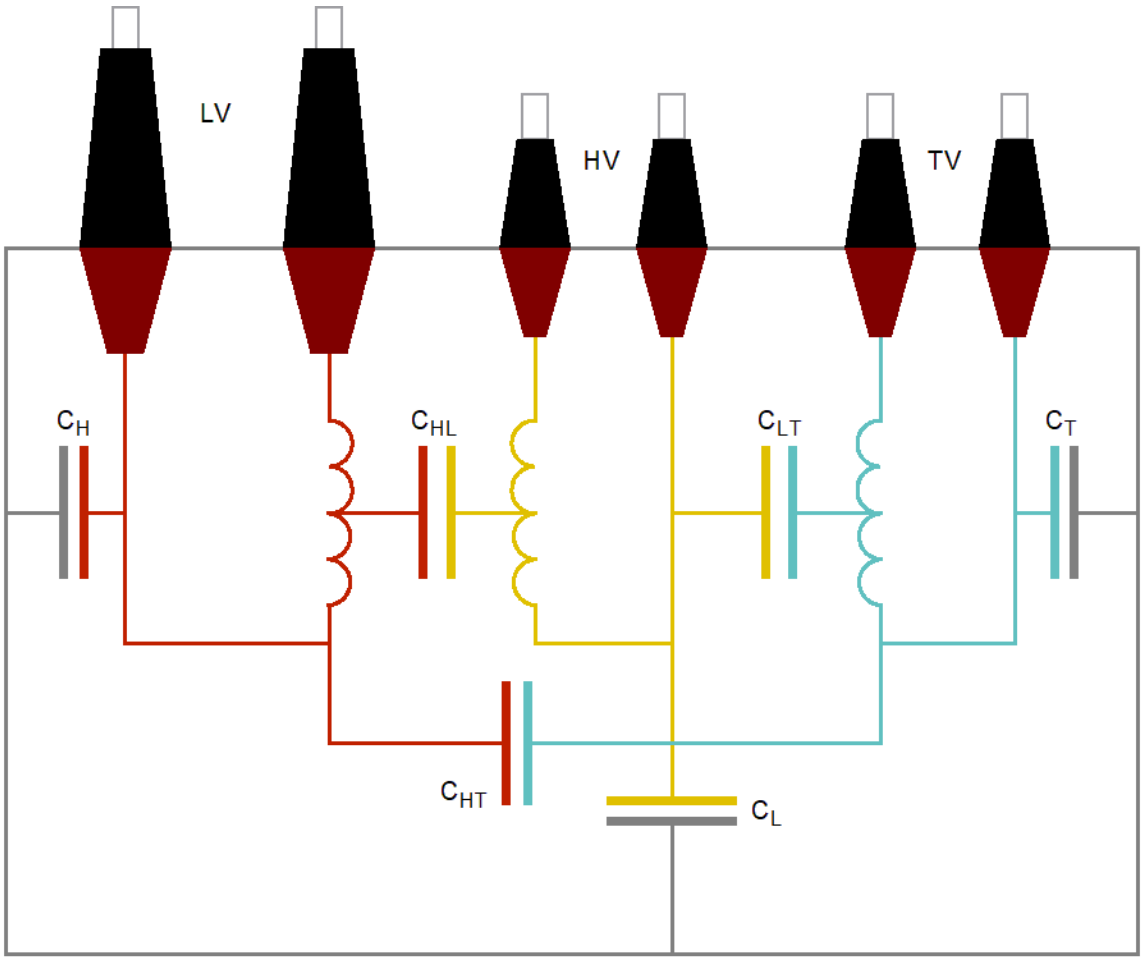

Figure 14-5: Insulations of a three-winding power transformer

In addition to insulation C_H, which is similar to C_H in a two-winding power transformer, there are the following insulations: C_L between the low-voltage winding and the tank, insulation C_T between the tertiary winding and the tank, and insulation C_{HT} between the high-voltage winding and the tertiary windings. C_T is similar to C_L in a two-winding power transformer, whereas C_L in a three-winding power transformer is mainly formed by the insulation between the low-voltage winding and the tank instead of the core limb. C_{HT} is very small and usually not of any specific importance as it is mainly formed by the stray capacitance from the HV side to the TV side via the press construction above and below the windings.

All phases and the neutral terminal of 1 winding (H, L and T) must be short-circuited.

Dielectric testing on a three-winding power transformer evaluates the following insulation types: C_{HL}, C_{LT}, C_{HT} C_H, C_L and C_T.

These can be assessed using the configuration detailed in the following table.

Table 14-2: **TR Winding Capacitance & Dissipation/Power Factor** test configuration for three-winding power transformers

HV OUT	Result	Mode	INPUT A	INPUT B	M GND
HV	C_{HL}	**UST - A**	Measured	Guarded	Guarded
	C_H	**GSTg - A+B+C+D**	Guarded	Guarded	Measured
	C_{HT}	**UST - B**	Guarded	Measured	Guarded
	$C_{HL} + C_H + C_{HT}$	**GST**	Measured	Measured	Measured
LV	C_{LH}	**UST - A**	Measured	Guarded	Guarded
	C_L	**GSTg - A+B+C+D**	Guarded	Measured	Guarded
	C_{LT}	**UST - B**	Guarded	Guarded	Measured
	$C_{LH} + C_L + C_{LT}$	**GST**	Measured	Measured	Measured
TV	C_{TH}	**UST - A**	Measured	Guarded	Guarded
	C_T	**GSTg - A+B+C+D**	Guarded	Measured	Guarded
	C_{TL}	**UST - B**	Guarded	Guarded	Measured
	$C_{TH} + C_L + C_{LT}$	**GST**	Measured	Measured	Measured

The same principles as outlined in Two-winding transformer (page 182) are applied to three-winding power transformers. High voltage is injected sequentially into the high-voltage, low-voltage, and tertiary windings. The resulting currents are measured across the remaining short-circuited windings using **Input A** and **Input B** of the *HVX10*.

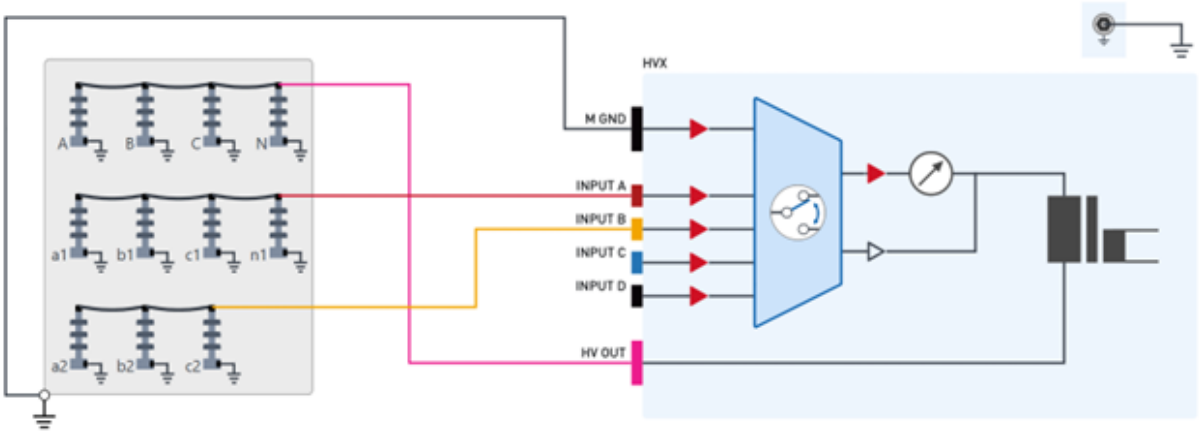

Figure 14-6: *HVX10* connected to a three-winding power transformer

14.1.2 Settings and conditions

For a more detailed description of the test settings, see Settings and conditions (page 116) in the description of the **C/Tan Delta** test.

Table 14-3: Available settings in *CPXpert* for the **TR Winding DF/PF & C** test

Settings	Description
Rated voltage L-L (HV)	The rated line-to-line (L-L) voltage of the high-voltage side can be filled out for each transformer winding. Based on the stated **Rated L-L voltage (HV)**, the test voltage points will be automatically pre-populated.
Rated voltage L-L (LV)	The rated line-to-line (L-L) voltage of the low-voltage side can be filled out for each transformer winding. Based on the stated **Rated L-L voltage (LV)**, the test voltage points will be automatically pre-populated.
Insulation medium	Insulation medium of the power transformer.
Default frequency	The nominal rated frequency of the test object. Typically, the measurement assessment is performed at the default frequency and at the highest test voltage measurement point.
Avoid default frequency	**Default option:** • **Avoid default frequency** = **On** Beside the default frequency of typically 50 or 60 Hz, two test points are utilized to measure the dissipation/power factor and capacitance value for suppressing electromagnetic noise influence of the environment. Both test points are then interpolated to the default frequency value. **Alternative option:** • **Avoid default frequency** = **Off** When **Avoid default frequency** is **Off**, the measurement is performed directly at the default frequency.

Settings	Description
Quick frequency change	**Default option:** • **Quick frequency change** = **On** The *CPX 200* performs quick frequency changes during measurement sequences to speed up the process. **Alternative option:** • **Quick frequency change** = **Off** When **Quick frequency change** is **Off**, the *CPX 200* is switched to a "slow mode" to ensure more stable conditions in case of problems during the measurement (error 0x400D00C9). This is achieved by ramping down the *CPX 200* before every frequency change. **Note:** In this mode, measurement sequences will take considerably longer to finish.
Test object temperature	**Recommended method** Measure the insulation temperature of the test object by using an integrated temperature sensor. **Alternative method** Measure the surface temperature of the test object. For more information refer to Test conditions (page 120).
Ambient temperature[1]	Environmental temperature
Humidity[1]	Environmental humidity
Weather[1]	Environmental weather condition
Temperature correction[1]	**Default option:** • **Temperature correction** = **Off** No temperature correction will be performed on the measured dissipation/power factor values **Alternative option:** • **Temperature correction** = **On** The stated **Temperature correction** factor will be applied to the measured dissipation or power factor value. Ideally, this correction factor should be based on the manufacturer's temperature dependency information.
Reference voltage[1]	**Default option:** • **Reference voltage** = **Off** No extrapolation is performed on I_{meas} and Watt losses to the stated reference voltage. **Alternative option:** • **Reference voltage** = **On** A linear extrapolation is performed on I_{meas} and Watt losses to the stated reference voltage. Typically, this option might be activated when it is not possible to reach the 10 kV test voltage.

[1] In the **Settings** tile, click the ▪▪▪ button to expand the view. For more information, refer to Test conditions (page 120) and Correction factors (page 121).

The following automatic assessment rules can be utilized in *CPXpert*.

Table 14-4: Available assessment rules in *CPXpert* for the **TR Winding DF/PF & C** test

Assessment rule	Description
Auto assessment	**Default option:** • **Auto assessment** = **On** The test results will be automatically evaluated based on the specified limits for the measurement results at the default rated frequency points. **Alternative option:** • **Auto assessment = Off** The test results can be evaluated manually.
Fail (Upper limit)	If the recorded dissipation or power factor value exceeds the upper **Fail** threshold, the measurement point assessment result will be marked as **Fail**.
Investigate (Upper limit)	If the recorded dissipation or power factor value is above the **Pass** limit but below the upper **Fail** limit, the measurement point assessment result will be marked as **Investigate**.
Pass	If the recorded dissipation or power factor value is in between the upper and lower **Investigate** limits, the measurement point assessment result will be marked as **Pass**.
Investigate (Lower limit)	If the recorded dissipation or power factor value is below the **Pass** limit but above the lower **Fail** limit, the measurement point assessment result will be marked as **Investigate**.
Fail (Lower limit)	If the recorded dissipation or power factor value is below the lower **Fail** threshold, the measurement point assessment result will be marked as **Fail**.

14.1.3 Measurement data

Table 14-5: Measurement data in *CPXpert* for the **TR Winding DF/PF & C** test

Data	Description
No.	Number of the measurement
Measurement	Arrangement of the measurement
Mode	Test mode according to IEEE Std 62-1995
Sweep	Drop-down menu providing sweep options (→ Sweeps (page 118))
V test	Target voltage
Frequency	Target frequency
V out	Measured output voltage
I meas.	Measured output current **Note:** The measured output current may differ from the injected test current. It varies based on the selected mode and the configuration of the test setup.
DF / PF	Measured dissipation/power factor value **Note:** Based on the defined loss index, the corresponding value is shown.
Cap. meas.	Measured capacitance value
Assessment	Assessment of the measurement point

14.1.4 Testing recommendation

- Ensure clean and dry bushing surfaces to minimize leakage currents. Especially in areas with high humidity or near the seaside, increased moisture particles may be present on surfaces. Short-circuit all transformer windings.
- If not all windings are short-circuited, additional measurement errors can be introduced.
- Note the insulation temperature before conducting dissipation/power factor measurements. They are temperature-dependent. Recording the temperature during testing allows for the application of a correction factor during or after measurement.

Note: Ideally, the insulation or winding temperature is derived from integrated transformer sensors. If integrated sensors are not available, the surface temperature can be measured with temperature meters.
Dissipation/power factor measurements are ideal for oil-filled transformers. For the insulation analysis of dry-type transformers, partial discharge measurements are recommended.

14.2 TR Bushing DF/PF & C1



The **TR Bushing DF/PF & C1** measurement is performed to analyze the condition of bushing insulations. Changes in capacitance can indicate partial breakdown of layers as well as oil in cracks for oil impregnated bushings (OIP).
Dissipation/power factor results additionally indicate the degree of aging and moisture ingress for paper-impregnated insulations.

This test is only available in *CPXpert*.

Depending on the **Loss Index** setting (→ General (page 52)), the test is either called **TR Bushing DF & C1** or **TR Bushing PF & C1**.

For more information related to the **TR Bushing DF/PF & C1** test, refer to the following sections:

- Safety (page 13)
- CPX 200 safety functions and components (page 20)
- HVX10 safety functions and components (page 36)
- Wiring and operation (page 84)
- Power transformer (page 89)
- Connecting the HVX10 to the CPX 200 (page 37)
- OMICRON Support (page 280)

⚠ DANGER

Death or severe injury caused by high voltage or current

- ▶ Never use the *HVX10* without a solid connection to ground with at least 6 mm^2.
- ▶ If applicable, solidly ground the test object. Use a grounding point as close as possible to the test object.
- ▶ Make sure to position the test object in the danger zone with appropriate distances to the work area.
- ▶ If the measurement is interrupted due to, for example, an unexpected loss of supply voltage or erroneous behavior of the *CPX 200*, do not touch the test setup until the energy has dissipated over time. Note that the length of time depends heavily on the test object.

⚠ DANGER

Death or severe injury caused by high voltage or current

The high-voltage cable is shielded and therefore safe. However, the 50 cm (20 in) of this cable highlighted in yellow have no shield.

- ▶ Avoid any direct contact of this part of the cable to ground potential and any objects.
- ▶ During a test, consider this part of the cable a live wire and dangerous.

⚠ DANGER

Death or severe injury caused by high voltage or current

Bushing C1 and C2 capacitance form a capacitive voltage divider. Applying test voltage with open bushing taps can lead to heavy arcing and destruction of the insulation.

During testing, use a suitable bushing test adapter. After testing, immediately install the bushing tap cover to ground the C2 capacitance.

▶ Never leave any bushing measurement or test tap open during operation.

14.2.1 Test setup

This **TR Bushing DF/PF & C1** test is designed for use when the bushings are installed within the power transformer.

The **TR Bushing DF/PF & C1** test can only be performed when the bushings under test are equipped with either a test tap or a measurement tap.

Together with the *HVX10*, the *CPX 200* can test all bushings per transformer winding. The 4 *HVX10* current measurement input channels can be connected to the test or measurement tap of the bushings under test, with the following wiring:

- **I IN A** is for the bushing on terminal A / H1
- **I IN B** is for the bushing on terminal B / H2
- **I IN C** is for the bushing on terminal C / H3
- **I IN D** is for the bushing on terminal N / H0

The wiring diagram will adjust according to the following settings:

- **Winding under test**
- **Vector group**

To minimize the influence of stray capacitances, all other transformer terminals, including the neutral terminals, should be short-circuited and connected to ground.

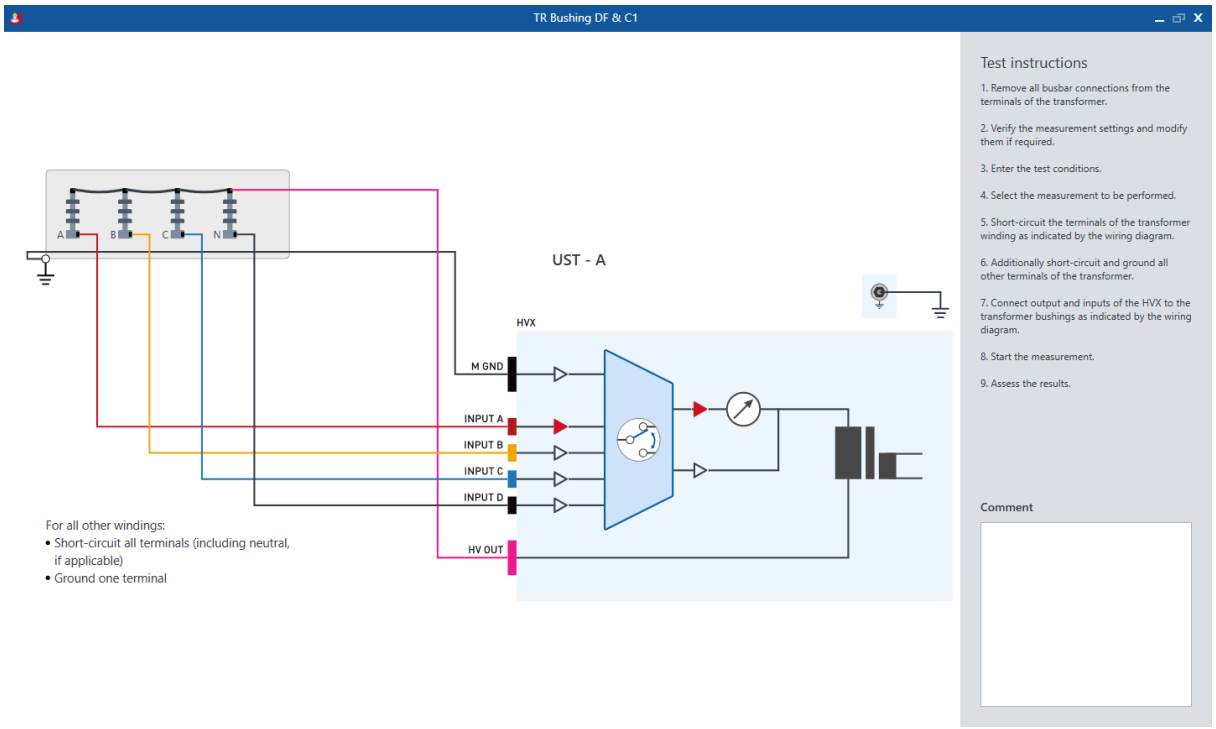

Figure 14-7: **TR Bushing DF/PF & C1** measurement on a YN high-voltage winding

14.2.2 Settings and conditions

For a more detailed description of the test settings, see Settings and conditions (page 116) in the description of the **C/Tan Delta** test.

Table 14-6: Available settings in *CPXpert* for the **TR Bushing DF/PF & C1** test

Settings	Description
Winding under test	Power transformer winding where the bushings under test are located.
Rated voltage L-L	The rated line-to-line (L-L) voltage is based on the transformer winding under test. Based on the stated rated L-L voltage, the test voltage points will be automatically pre-populated.
Min. rated voltage	Enter the minimum rated voltage of the bushings under test. This value will automatically pre-populate the rated voltages for the other bushings on this transformer winding. **Note:** Sometimes the neutral bushing has lower rated voltage specifications than the bushings installed towards the phases. When expanding the **Bushings** tile with the ▪▪▪ button, the minimum rated voltage medium for each bushing can be set individually.
Insulation type	Insulation type for the bushing under test. The selected value will automatically be applied to the other bushings on this transformer winding. When expanding the **Bushings** tile with the ▪▪▪ button, the insulation type for each bushing can be set individually.
Default frequency	The nominal rated frequency of the test object. Typically, the measurement assessment is performed at the default frequency and at the highest test voltage measurement point.
Avoid default frequency	**Default option:** • **Avoid default frequency** = **On** To suppress electromagnetic noise influence of the environment, 2 test points besides the **Default frequency** are utilized to measure the dissipation/power factor and capacitance value. Both test points are then interpolated to the default frequency value. **Alternative option:** • **Avoid default frequency** = **Off** When **Avoid default frequency** is off, the measurement is performed directly at the default frequency.

Settings	Description
Quick frequency change	**Default option:** • **Quick frequency change** = **On** The *CPX 200* performs quick frequency changes during measurement sequences to speed up the process. **Alternative option:** • **Quick frequency change** = **Off** When **Quick frequency change** is **Off**, the *CPX 200* is switched to a "slow mode" to ensure more stable conditions in case of problems during the measurement (error 0x400D00C9). This is achieved by ramping down the *CPX 200* before every frequency change. **Note:** In this mode, measurement sequences will take considerably longer to finish.
Test object temperature	**Recommended method** Measure the insulation temperature of the test object by using an integrated temperature sensor. **Alternative method** Measure the surface temperature of the test object. For more information, refer to Test conditions (page 120).
Ambient temperature[1]	Environmental temperature
Humidity[1]	Environmental humidity
Weather[1]	Environmental weather condition
Temperature correction[1]	**Default option:** • **Temperature correction** = **Off** No temperature correction will be performed on the measured dissipation/power factor values **Alternative option:** • **Temperature correction** = **On** The stated **Temperature correction** factor will be applied to the measured dissipation/power factor value. Ideally, this correction factor should be based on the manufacturer's temperature dependency information.
Reference voltage[1]	**Default option:** • **Reference voltage** = **Off** No extrapolation is performed on I_{meas} and Watt losses to the stated reference voltage. **Alternative option:** • **Reference voltage** = **On** A linear extrapolation is performed on I_{meas} and Watt losses to the stated reference voltage. This option might typically be activated when it is not possible to reach the 10 kV test voltage.

[1] In the **Settings** tile, click the ▪▪▪ button to expand the view. For more information, refer to Test conditions (page 120) and Correction factors (page 121).

The following automatic assessment rules can be used in *CPXpert*.

Table 14-7: Available assessment rules in *CPXpert* for the **TR Bushing DF/PF & C1** test

Assessment rule	Description
Auto assessment	**Default option:** • **Auto assessment** = **On** The test results will be automatically evaluated based on the specified limits for the measurement results at the default rated frequency points. **Alternative option:** • **Auto assessment = Off** The test results can be evaluated manually.
High fail limit	If the recorded dissipation/power factor or capacitance value is above the high fail limit, the measurement point assessment result will be marked as **Fail**.
High warning limit	If the recorded dissipation/power factor or capacitance value is above the high warning limit but below the upper threshold of high fail limit, the measurement point assessment result will be marked as **Investigate**.
Between high & low warning limits	If the recorded dissipation/power factor or capacitance value is between the high and low warning limits, the measurement point assessment result will be marked as **Pass**.
Low warning limit	If the recorded dissipation/power factor or capacitance value is below the low warning limit but above the low fail limit, the measurement point assessment result will be marked as **Investigate**.
Low fail limit	If the recorded dissipation/power factor or capacitance value is below the low fail limit, the measurement point assessment result will be marked as **Fail**.

The limits of **TR Bushing DF/PF & C1** can be determined in the following 2 modes:

- **Limit Schemes**: Automatically apply appropriate limit settings based on the selected IEC or IEEE rule sets
- **Custom Values**: Define and use the custom assessment limits.

The applied limit scheme calculation depends on:

- **Bushing Insulation Type**
- **Presence of Reference Values**

The reference values can be entered in 2 ways:

- **Bushings** tile: Reference values can be entered directly within the **Bushings** tile by expanding the window with the ▪▪▪ button.
- **Power Transformer Nameplate**: Reference values can be directly entered in the general **Asset Nameplate** view.

Within the same views where reference values are entered, the bushing insulation type for each bushing can be specified as well.

Supported bushing insulation types for limit scheme calculation:

- Oil-Impregnated Paper (OIP)
- Resin-Impregnated Paper (RIP)
- Resin-Bonded Paper (RBP)
- Resin-Impregnated Synthetics (RIS)

The following table summarizes the calculation method for limits, based on the bushing insulation type and the availability of reference values.

Table 14-8: Logic for limit scheme calculation

Limit schemes	Limit scheme behavior for supported bushing types	Limit scheme behavior for unsupported bushing types
Dissipation/Power Factor: (Reference values available)	Assessment limits are calculated dynamically based on the entered dissipation/power factor values.	Assessment limits are calculated dynamically based on the entered dissipation/power factor values.
Dissipation/Power Factor: (No reference values available)	Assessment limits are based on default IEC and IEEE scheme limits.	No predefined limits are applied. Use **Custom** to enter assessment limits.
Capacitance (Reference values available)	Assessment limits are calculated dynamically based on the entered dissipation-/power factor values.	No predefined limits are applied. Use **Custom** to enter assessment limits.
Capacitance (No reference values available)	No predefined limits are applied. Use **Custom** to enter assessment limits.	No predefined limits are applied. Use **Custom** to enter assessment limits.

When supported bushing insulation types and reference values are present, the specified multiplier/divider is used to calculate the limits.

Table 14-9: Limit scheme calculation for supported bushing types with reference values

Dissipation/Power Factor for OIP, RIP, RPB and RIS bushing insulation types	
High fail limit	The limit set based on: **High fail limit** = DF ref (DF C1) × Multiplier (High fail limit)
High warning limit	The limit set based on: **High warning** = DF ref (DF C1) × Multiplier (High warning limit)
Low warning limit	The limit set based on: **Low warning limit** = DF ref (DF C1) / Divider (High fail limit)
Capacitance for OIP, RIP, RPB and RIS bushing insulation types	
High fail limit	The limit set based on: **High fail limit** = C1 ref (Cap C1) × 1.10
High warning limit	The limit set based on: **High warning limit** = C1 ref (Cap C1) × 1.05
Low warning limit	The limit set based on: **Low warning limit** = C1 ref (Cap C1) × 0.95
Low fail limit	The limit set based on: **Low fail limit** = C1 ref (Cap C1) × 0.90

14.2.3 Measurement data

Table 14-10: Measurement data in *CPXpert* for the **TR Bushing DF/PF & C1** test

Data	Description
No.	Number of the measurement
Measurement	Arrangement of the measurement
Mode	Test mode according to IEEE Std 62-1995
Sweep	Drop-down menu providing sweep options (→ Sweeps (page 118))
V test	Target voltage
Frequency	Target frequency
V out	Measured output voltage
I meas.	Measured output current **Note:** The measured output current may differ from the injected test current. It varies based on the selected mode and the configuration of the test setup.
DF / PF	Measured dissipation/power factor value Based on the defined loss index, the corresponding value is shown.
Cap. meas.	Measured capacitance value
Assessment	Assessment of the measurement point

14.2.4 Testing recommendation

- ▶ Ensure clean and dry bushing surfaces to minimize leakage currents. Especially in areas with high humidity or near the seaside, increased moisture particles may be present on surfaces.
- ▶ Short-circuit all transformer windings. If not all windings are short-circuited, additional measurement errors can be introduced.
- ▶ Note the insulation temperature before conducting dissipation/power factor measurements. They are temperature-dependent. Recording the temperature during testing allows for the application of a correction factor during or after the measurement.

Note: Ideally, the insulation or winding temperature is derived from integrated transformer sensors. If integrated sensors are not available, the surface temperature can be measured with temperature meters.
TR Bushing DF/PF & C1 tests can be performed when the bushings of the power transformer are equipped with a test or voltage tap.

- ▶ Don’t forget to mount the bushing tap cover after the measurement is done. Voltage applied to the transformer windings may cause flashover at open bushing taps.
- ▶ A rise in capacitance of more than 10 % compared to previous results is normally considered to be dangerous for bushings. It indicates that a part of the insulation distance is already compromised and the dielectric stress to the remaining insulation is too high.
- ▶ Slightly lower measured capacitance compared to the reference value is very common during factory acceptance tests. This occurs because the bushings are mounted on test flanges instead of the transformers. When the bushings are later mounted on the transformer tank’s bushing flange, additional stray capacitances (in parallel) cause a slight reduction in the main insulation capacitance, C1.

14.3 TR Bushing DF/PF & C2



The **TR Bushing DF/PF & C2** measurement is performed to assess the bushing tap compartment's insulation as well as the outermost main core insulating wraps and surrounding filler material. Often, C2 serves as early detection of moisture ingress or other contaminations that collect around the flange area because of a deteriorated or faulty top terminal gasket.

This test is only available in *CPXpert*.

Depending on the **Loss Index** setting (→ General (page 52)), the test is either called **TR Bushing DF & C2** or **TR Bushing PF & C2**.

Before setting the *CPX 200* and the *HVX10* into operation and carrying out a test, it is essential that you have read and understood the following sections:

- Safety (page 13)
- CPX 200 safety functions and components (page 20)
- HVX10 safety functions and components (page 36)
- Wiring and operation (page 84)
- Power transformer (page 89)
- Connecting the HVX10 to the CPX 200 (page 37)
- OMICRON Support (page 280)

⚠ DANGER

Death or severe injury caused by high voltage or current

- ▶ Never use the *HVX10* without a solid connection to ground with at least 6 mm^2.
- ▶ If applicable, solidly ground the test object. Use a grounding point as close as possible to the test object.
- ▶ Make sure to position the test object in the danger zone with appropriate distances to the work area.
- ▶ If the measurement is interrupted due to, for example, an unexpected loss of supply voltage or erroneous behavior of the *CPX 200*, do not touch the test setup until the energy has dissipated over time. Note that the length of time depends heavily on the test object.

⚠ DANGER

Death or severe injury caused by high voltage or current

The high-voltage cable is shielded and therefore safe. However, the 50 cm (20 in) of this cable highlighted in yellow have no shield.

- ▶ Avoid any direct contact of this part of the cable to ground potential and any objects.
- ▶ During a test, consider this part of the cable a live wire and dangerous.

⚠ DANGER

Death or severe injury caused by high voltage or current

Bushing C1 and C2 capacitance form a capacitive voltage divider. Applying test voltage with open bushing taps can lead to heavy arcing and destruction of the insulation.

During testing, use a suitable bushing test adapter. After testing, immediately install the bushing tap cover to ground the C2 capacitance.

Don't exceed the nameplate specification of the bushing tap during testing. Typically, test taps are rated up to 500 V and measurement taps up to 2-3 kV. Injecting a higher voltage than the rated bushing tap voltage can damage the test tap.

- ▶ Never leave any bushing measurement or test tap open during operation.

14.3.1 Test setup

This **TR Bushing DF/PF & C2** test is designed for use when the bushings are installed within the power transformer.

The **TR Bushing DF/PF & C2** test can only be performed when the bushings under test are equipped with either a test tap or a measurement tap.

Together with the *HVX10*, the *CPX 200* can perform 1 bushing C2 measurement at a time when:

- **I IN A** (*HVX10*) is connected to the short-circuited winding under test terminals
- **HV OUT** (*HVX10*) is connected to the test or measurement tap of the bushing under test

The wiring diagram will adjust according to the following settings:

- **Winding under test**
- **Vector group**

To minimize the influence of stray capacitances, all other transformer terminals, including the neutral terminals, should be short-circuited and connected to ground.

If the bushing has a test or measurement tap installed, the wiring diagram will explicitly show that the non-tested bushing tap should be grounded.

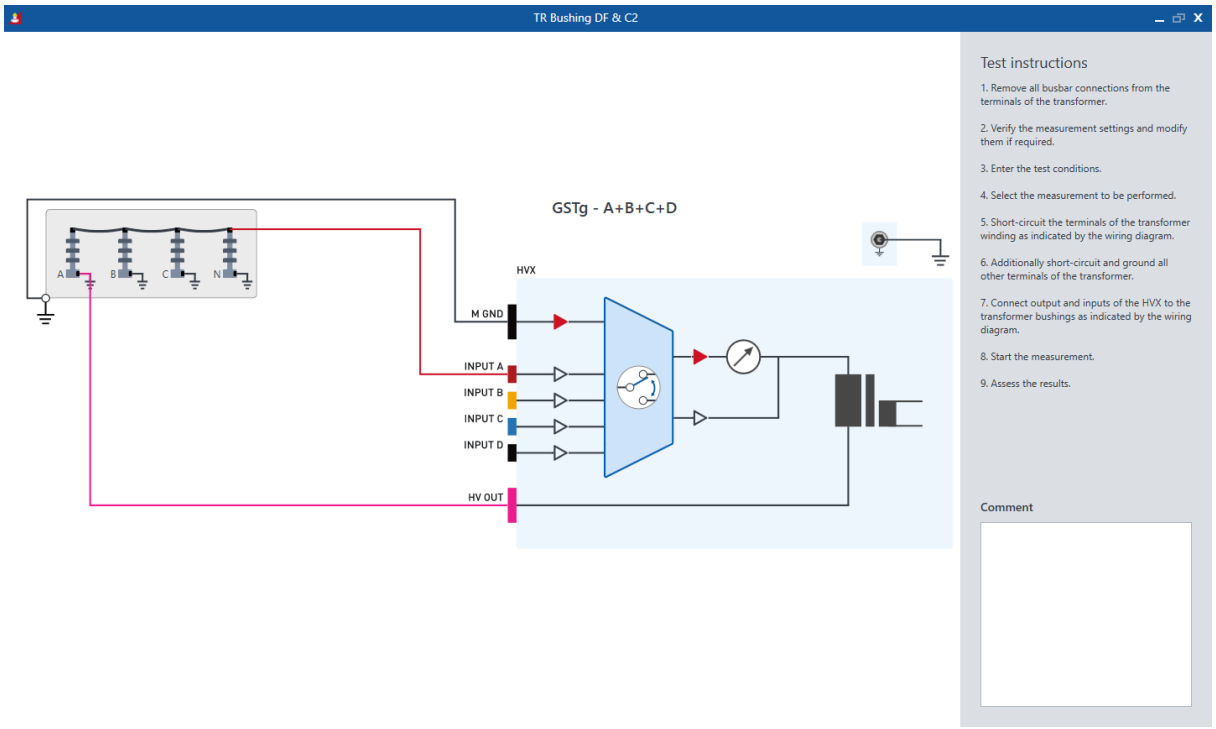

Figure 14-8: **TR Bushing DF/PF & C2** test on a YN high-voltage winding

14.3.2 Settings and conditions

For a more detailed description of the test settings, see Settings and conditions (page 116) in the description of the **C/Tan Delta** test.

Table 14-11: Available settings in *CPXpert* for the **TR Bushing DF/PF & C2** test

Settings	Description
Winding under test	Power transformer winding where the bushings under test are located
Default frequency	The nominal rated frequency of the test object. Typically, the measurement assessment is performed at the default frequency and at the highest test voltage measurement point.
Avoid default frequency	**Default option:** • **Avoid default frequency** = **On** To suppress electromagnetic noise influence of the environment, 2 test points besides the **Default frequency** are utilized to measure the dissipation/power factor and capacitance value. Both test points are then interpolated to the default frequency value. **Alternative option:** • **Avoid default frequency** = **Off** When **Avoid default frequency** is off, the measurement is performed directly at the default frequency.

Settings	Description
Quick frequency change	**Default option:** • **Quick frequency change** = **On** The *CPX 200* performs quick frequency changes during measurement sequences to speed up the process. **Alternative option:** • **Quick frequency change** = **Off** When **Quick frequency change** is **Off**, the *CPX 200* is switched to a "slow mode" to ensure more stable conditions in case of problems during the measurement (error 0x400D00C9). This is achieved by ramping down the *CPX 200* before every frequency change. **Note:** In this mode, measurement sequences will take considerably longer to finish.
Test object temperature	**Recommended method** Measure the insulation temperature of the test object by using an integrated temperature sensor. **Alternative method** Measure the surface temperature of the test object. For more information refer to Test conditions (page 120).
Ambient temperature[1]	Environmental temperature
Humidity[1]	Environmental humidity
Weather[1]	Environmental weather condition
Temperature correction[1]	**Default option:** • **Temperature correction** = **Off** No temperature correction will be performed on the measured dissipation/power factor values **Alternative option:** • **Temperature correction** = **On** The stated **Temperature correction** factor will be applied to the measured dissipation/power factor value. Ideally, this correction factor should be based on the manufacturer's temperature dependency information.
Reference voltage[1]	**Default option:** • **Reference voltage** = **Off** No extrapolation is performed on I_{meas} and Watt losses to the stated reference voltage. **Alternative option:** • **Reference voltage** = **On** A linear extrapolation is performed on I_{meas} and Watt losses to the stated reference voltage. This option might typically be activated when it is not possible to reach the 10 kV test voltage.

[1] In the **Settings** tile, click the ▪▪▪ button to expand the view. For more information, refer to Test conditions (page 120) and Correction factors (page 121).

14.3.3 Measurement data

Table 14-12: Measurement data in *CPXpert* for the **TR Bushing DF/PF & C2** test

Data	Description
No.	Number of the measurement
Measurement	Arrangement of the measurement
Mode	Test mode according to the IEEE Std 62-1995
Sweep	Drop-down menu providing sweep options (→ Sweeps (page 118))
V test	Target voltage
Frequency	Target frequency
V out	Measured output voltage
I meas.	Measured output current **Note:** The measured output current may differ from the injected test current. It varies based on the selected mode and the configuration of the test setup.
DF / PF	Measured dissipation/power factor value Based on the defined loss index, the corresponding value is shown.
Cap. meas.	Measured capacitance value
Assessment	Assessment of the measurement point

14.3.4 Testing recommendation

- ▶ Ensure clean and dry bushing surfaces to minimize leakage currents. Especially in areas with high humidity or near the seaside, increased moisture particles may be present on surfaces.
- ▶ Short-circuit all transformer windings. If not all windings are short-circuited, additional measurement errors can be introduced.
- ▶ Note the insulation temperature before conducting dissipation/power factor measurements. They are temperature-dependent. Recording the temperature during testing allows for the application of a correction factor during or after the measurement.

Note: Ideally, the insulation or winding temperature is derived from integrated transformer sensors. If integrated sensors are not available, the surface temperature can be measured with temperature meters.
TR Bushing DF/PF & C2 tests can be performed when the bushings of the power transformer are equipped with a test or voltage tap.

- ▶ Don’t forget to mount the bushing tap cover after the measurement is done. Voltage applied to the transformer windings may cause flashover at open bushing taps.

14.4 TR Ratio

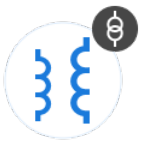

TR Ratio measurements are performed to verify the fundamental operating principle of a power transformer. By measuring the ratio and phase angle from one winding to the other, open circuits and short-circuited turns can be detected. The ratio is determined during factory acceptance tests and needs to be checked routinely once the transformer is in service.

⚠ DANGER

Death or severe injury caused by high voltage or current

- ▶ Do not connect the **OUT B** output of the *CPX 200* to the low-voltage side of the power transformer. This will cause dangerous voltages on the high-voltage side.
- ▶ If the measurement is interrupted due to, for example, an unexpected loss of supply voltage or erroneous behavior of the *CPX 200*, do not touch the test setup until the energy has dissipated over time. Note that the length of time depends heavily on the test object.

NOTICE

Equipment damage due to infeed possible

- ▶ Always ensure that the *CPX 200* is connected to the tap changer last.

For more information related to the **TR Ratio** test, refer to the following sections:

- Safety (page 13)
- CPX 200 safety functions and components (page 20)
- Wiring and operation (page 84)
- Power transformer (page 89)
- Assessment rules (page 62)

14.4.1 Test setup

The wiring diagram will adjust according to the following settings:

- **Number of windings**
- **Number of phases**
- **Vector group**
- **Output**

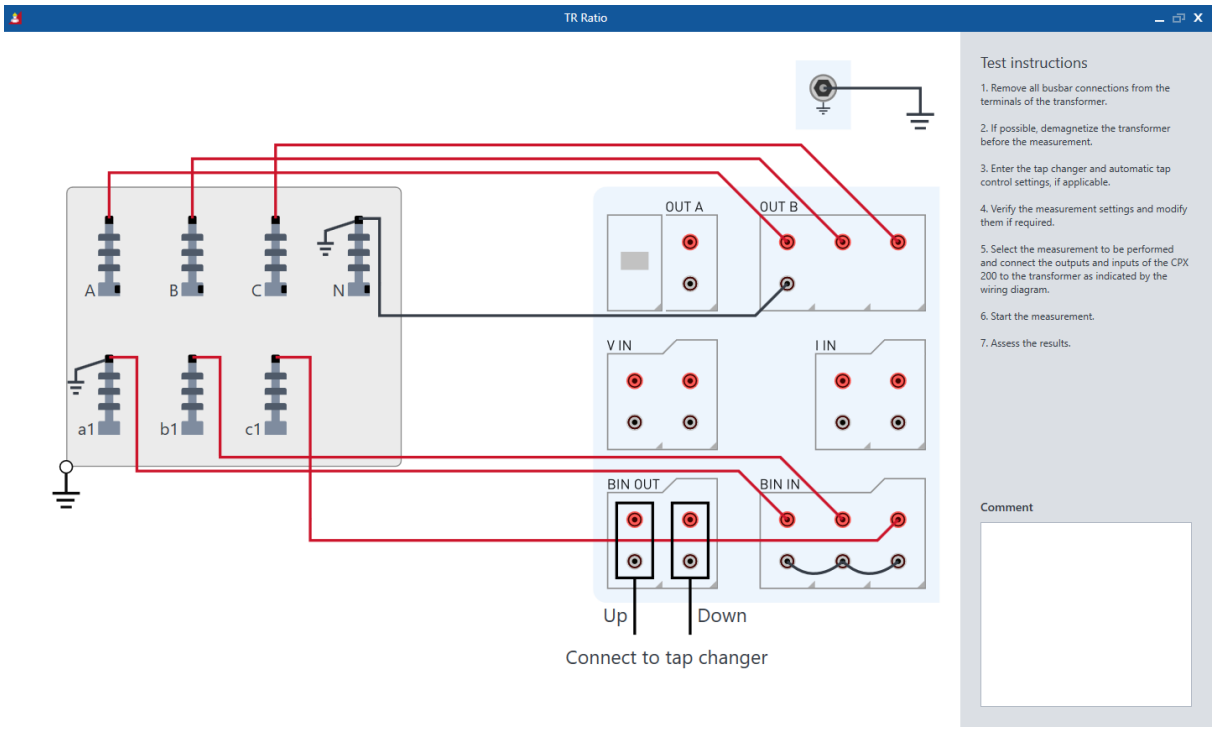

Figure 14-9: Three-phase **TR Ratio** measurement wiring

The **Output** option determines whether the *CPX 200* performs a single-phase or a three-phase ratio measurement.

- Single-phase ratio measurements measure the Transformer Turns Ratio (TTR), which is the ratio of the number of turns in a pair of windings.
- Three-phase ratio measurements are based on the Transformer Voltage Ratio (V ratio). The nominal voltage ratio is derived from the line-to-line voltages specified on the nameplate of the power transformer under test.

The following table presents the available wiring options using the *CPX 200*, based on the selected settings.

Table 14-13: Available wiring options

Measurement	Output	Input	Tap Changer Up	Tap Changer Down
Single-phase	**OUT B1**	**V IN2**	**BIN OUT1**	**BIN OUT2**
Three-phase	**OUT B123**	**BIN IN**	**BIN OUT1**	**BIN OUT2**

For three-phase measurements, the transformer terminals of the winding pair being tested can be connected to **OUT B123** and **BIN IN**. However, for single-phase measurements, the terminals need to be connected to **OUT B1** and **V IN2**.

Note: The connections to **OUT B1** and **V IN2** vary depending on the phase being tested.

For detailed wiring instructions for single-phase measurements, refer to Single-phase ratio measurement wiring (page 208).

14.4.2 Settings and conditions

The following measurement settings and conditions are applicable for *CPXpert* as well as *TouchControl*.

Table 14-14: Available settings for the **TR Ratio** test

Settings data	Description
Winding pair under test	This defines the pair of windings between which the ratio measurement is performed. The availability of combinations depends on the selected number of windings.
Rated voltage L-L (HV)	The rated line-to-line (L-L) voltage of the high-voltage side can be filled out for each transformer winding. Based on the stated **Rated L-L voltage (HV)**, the test voltage points will be automatically pre-populated.
Rated voltage L-L (LV)	The rated line-to-line (L-L) voltage of the low-voltage side can be filled out for each transformer winding. Based on the stated **Rated L-L voltage (LV)**, the test voltage points will be automatically pre-populated.
Test frequency	Target test frequency. By default, this frequency is set to match the rated frequency of the power transformer.
Output range	**Default option:** • **3 × 250V** In this mode, a three-phase measurement is performed. **Alternative option:** • **1 × 300V** In this mode, a single-phase measurement is performed.
Measurement	**Available when Output range setting 1 × 300V is selected.** The measurement tile allows you to select the phase under test. Depending on the selected phase, the winding pair being tested, and the defined transformer vector group, the necessary terminal combination for **OUT B** and **V IN2** will be indicated. The wiring follows the IEEE wiring recommendation.
Ratio type	**Default option:** • **Voltage ratio** when **Output range** setting **3 × 250V** is selected. • **Turns ratio (TTR)** when **Output range** setting **1 × 300V** is selected. **Alternative option:** • **Turns ratio (TTR)** when **Output range** setting **3 × 250V** is selected. • **Voltage ratio** when **Output range** setting **1 × 300V** is selected. **Note:** Alternative options include the calculation of the **Voltage ratio** and **Turns ratio (TTR)**, based on the specified conversion factor, which depends on the selected vector group. To measure both parameters, both single-phase and three-phase measurements need to be performed.

Settings data	Description
Auto tap control	**Default option:** • **Auto tap control** = **On** The *CPX 200* switches between taps. **Alternative option:** • **Auto tap control** = **Off** The tap position must be selected manually in the **Tap position** drop-down list (only available when **Auto tap control** is **Off**).
Tap position	**Only available when Auto tap control is Off** Drop-down list to manually select the tap position.
Impulse time	**Only available when Auto tap control is On** Duration of the impulse triggering the tap change
Tap time	**Only available when Auto tap control is On** Time for the change between 2 tap positions
Start tap	**Only available when Auto tap control is On** Start tap position of the test.
Stop tap	**Only available when Auto tap control is On** Stop tap position of the test **Note:** The taps can be switched through upwards or downwards.

The following automatic assessment rules can be utilized in *CPXpert*.

Table 14-15: Available assessment rules for the **TR Ratio** test

Assessment rule	Description
Auto assessment	**Default option:** • **Auto assessment** = **On** The test results will be automatically evaluated based on the specified limits. **Note:** These automatic assessments can be manually overridden if necessary. **Alternative option:** • **Auto assessment** = **Off** The test results can be evaluated manually.
Ratio deviation (+/-)	Test results are marked as **Pass** if the calculated ratio deviation falls within the specified percentage limit.
Phase deviation (+/-)	Test results are marked as **Pass** if the calculated phase error falls within the specified degree limit.

14.4.3 Measurement data

Table 14-16: Measurement data for the **TR Ratio** test

Data	Description
No.	Number of the measurement
Tap	Identification of the tap changer position under test

Data	Description
Measurement	Arrangement of the measurement **Note:** The **Measurement** field appears only when **Phases** = **3** is selected in the **Transformer** tile.
Nominal ratio	Nominal ratio of the power transformer
V out	Measured line-to-line voltage of the first winding under test based on **OUT B**
I out	Measured primary current based on **OUT B**
V in	Measured line-to-line voltage of the second winding under test based on **BIN IN**
V phase	Phase shift between first and second winding voltage
Turns ratio (TTR)	Measured voltage ratio or turns ratio based on the selected **Ratio type**
Ratio deviation	Deviation of the measured transformer ratio from the nominal transformer ratio
Assessment	Assessment of the measurement point

14.4.4 Testing recommendations

The required cable set depends on whether a single-phase or three-phase measurement is being performed.

Picture	Recommended situation
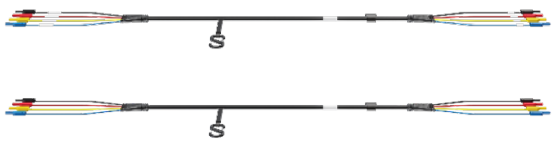	**2 multi-asset cables for three-phase ratio measurements** Optional 4-pole colored multi-asset cables are available for the *CPX 200*. The cables are color-coded to indicate the terminal connections. • Red = Terminal 1 • Yellow = Terminal 2 • Blue = Terminal 3 • Black = Neutral Terminal There are 2 versions of these cables: 1 with white-colored label markers beside the 4 mm plugs, and 1 without. These labels assist in identifying the appropriate winding for wiring.
	**4 test leads for single-phase ratio measurements** Individual test leads can be the preferred choice when performing single-phase ratio measurements. Once the ratio measurement is complete, the cables can be used for other tests without the need to rewire on one side of the transformer terminal.

Picture	Recommended situation
	**2 coaxial cables for tap changer wiring** The 2 provided coaxial cables are ideally suited for wiring the tap changer. One is needed for the up-switching operation and the other for the down-switching operation.

14.4.5 Single-phase ratio measurement wiring

The following table displays all wiring options for single-phase ratio measurements.

Table 14-17: Overview for single-phase ratio measurement wiring in dependence of the transformer vector group

HV	LV	A	B	C
D	d0	A-B : a1-b1	B-C : b1-c1	C-A : c1-a1
		H1-H2 : X1-X2	H2-H3 : X2-X3	H3-H1 : X3-X1
D	d2	A-C : a1-b1	B-A : b1-c1	C-B : c1-a1
		H1-H3 : X1-X2	H2-H1 : X2-X3	H3-H2 : X3-X1
D	d4	A-B : c1-a1	B-C : a1-b1	C-A : b1-c1
		H1-H2 : X3-X1	H2-H3 : X1-X2	H3-H1 : X2-X3
D	d6	A-B : b1-a1	B-C : c1-b1	C-A : a1-c1
		H1-H2 : X2-X1	H2-H3 : X3-X2	H3-H1 : X1-X3
D	d8	A-C : b1-a1	B-A : c1-b1	C-B : a1-c1
		H1-H3 : X2-X1	H2-H1 : X3-X2	H3-H2 : X1-X3
D	d10	A-B : a1-c1	B-C : b1-a1	C-A : c1-b1
		H1-H2 : X1-X3	H2-H3 : X2-X1	H3-H1 : X3-X2
D	y1	A-BC : a1-c1	B-CA : b1-a1	C-AB : c1-b1
		H1-H2H3 : X1-X3	H2-H3H1 : X2-X1	H3-H1H2 : X3-X2
D	y3	B-CA : a1-b1	C-AB : b1-c1	A-BC : c1-a1
		H2-H3H1 : X1-X2	H3-H1H2 : X2-X3	H1-H2H3 : X3-X1
D	y5	A-BC : b1-a1	B-CA : c1-b1	C-AB : a1-c1
		H1-H2H3 : X2-X1	H2-H3H1 : X3-X2	H3-H1H2 : X1-X3
D	y7	A-BC : c1-a1	B-CA : a1-b1	C-AB : b1-c1
		H1-H2H3 : X3-X1	H2-H3H1 : X1-X2	H3-H1H2 : X2-X3
D	y9	B-CA : b1-a1	C-AB : c1-b1	A-BC : a1-c1
		H2-H3H1 : X2-X1	H3-H1H2 : X3-X2	H1-H2H3 : X1-X3
D	y11	A-BC : a1-b1	B-CA : b1-c1	C-AB : c1-a1
		H1-H2H3 : X1-X2	H2-H3H1 : X2-X3	H3-H1H2 : X3-X1
D	yn1	A-C : a1-n1	B-A : b1-n1	C-B : c1-n1
		H1-H3 : X1-X0	H2-H1 : X2-X0	H3-H2 : X3-X0
D	yn3	B-C : a1-n1	C-A : b1-n1	A-B : c1-n1
		H2-H3 : X1-X0	H3-H1 : X2-X0	H1-H2 : X3-X0
D	yn5	A-B : n1-a1	B-C : n1-b1	C-A : n1-c1

HV	LV	A	B	C
		H1-H2 : X0-X1	H2-H3 : X0-X2	H3-H1 : X0-X3
D	yn7	A-C : n1-a1	B-A : n1-b1	C-B : n1-c1
		H1-H3 : X0-X1	H2-H1 : X0-X2	H3-H2 : X0-X3
D	yn9	B-C : n1-a1	C-A : n1-b1	A-B : n1-c1
		H2-H3 : X0-X1	H3-H1 : X0-X2	H1-H2 : X0-X3
D	yn11	A-B : a1-n1	B-C : b1-n1	C-A : c1-n1
		H1-H2 : X1-X0	H2-H3 : X2-X0	H3-H1 : X3-X0
D	z0	A-B : a1-b1	B-C : b1-c1	C-A : c1-a1
		H1-H2 : X1-X2	H2-H3 : X2-X3	H3-H1 : X3-X1
D	z2	A-C : a1-b1	B-A : b1-c1	C-B : c1-a1
		H1-H3 : X1-X2	H2-H1 : X2-X3	H3-H2 : X3-X1
D	z4	A-B : c1-a1	B-C : a1-b1	C-A : b1-c1
		H1-H2 : X3-X1	H2-H3 : X1-X2	H3-H1 : X2-X3
D	z6	A-B : b1-a1	B-C : c1-b1	C-A : a1-c1
		H1-H2 : X2-X1	H2-H3 : X3-X2	H3-H1 : X1-X3
D	z8	A-C : b1-a1	B-A : c1-b1	C-B : a1-c1
		H1-H3 : X2-X1	H2-H1 : X3-X2	H3-H2 : X1-X3
D	z10	A-B : a1-c1	B-C : b1-a1	C-A : c1-b1
		H1-H2 : X1-X3	H2-H3 : X2-X1	H3-H1 : X3-X2
D	zn0	A-B : a1-b1	B-C : b1-c1	C-A : c1-a1
		H1-H2 : X1-X2	H2-H3 : X2-X3	H3-H1 : X3-X1
D	zn2	A-C : a1-b1	B-A : b1-c1	C-B : c1-a1
		H1-H3 : X1-X2	H2-H1 : X2-X3	H3-H2 : X3-X1
D	zn4	A-B : c1-a1	B-C : a1-b1	C-A : b1-c1
		H1-H2 : X3-X1	H2-H3 : X1-X2	H3-H1 : X2-X3
D	zn6	A-B : b1-a1	B-C : c1-b1	C-A : a1-c1
		H1-H2 : X2-X1	H2-H3 : X3-X2	H3-H1 : X1-X3
D	zn8	A-C : b1-a1	B-A : c1-b1	C-B : a1-c1
		H1-H3 : X2-X1	H2-H1 : X3-X2	H3-H2 : X1-X3
D	zn10	A-B : a1-c1	B-C : b1-a1	C-A : c1-b1
		H1-H2 : X1-X3	H2-H3 : X2-X1	H3-H1 : X3-X2
Y	d1	A-BC : a1-b1	B-CA : b1-c1	C-AB : c1-a1
		H1-H2H3 : X1-X2	H2-H3H1 : X2-X3	H3-H1H2 : X3-X1
Y	d3	A-BC : c1-b1	B-CA : a1-c1	C-AB : b1-a1
		H1-H2H3 : X3-X2	H2-H3H1 : X1-X3	H3-H1H2 : X2-X1
Y	d5	A-BC : c1-a1	B-CA : a1-b1	C-AB : b1-c1
		H1-H2H3 : X3-X1	H2-H3H1 : X1-X2	H3-H1H2 : X2-X3
Y	d7	A-BC : b1-a1	B-CA : c1-b1	C-AB : a1-c1
		H1-H2H3 : X2-X1	H2-H3H1 : X3-X2	H3-H1H2 : X1-X3
Y	d9	A-BC : b1-c1	B-CA : c1-a1	C-AB : a1-b1

HV	LV	A	B	C
		H1-H2H3 : X2-X3	H2-H3H1 : X3-X1	H3-H1H2 : X1-X2
Y	d11	A-BC : a1-c1	B-CA : b1-a1	C-AB : c1-b1
		H1-H2H3 : X1-X3	H2-H3H1 : X2-X1	H3-H1H2 : X3-X2
Y	y0	A-C : a1-c1	B-A : b1-a1	C-B : c1-b1
		H1-H3 : X1-X3	H2-H1 : X2-X1	H3-H2 : X3-X2
Y	y6	A-C : c1-a1	B-A : a1-b1	C-B : b1-c1
		H1-H3 : X3-X1	H2-H1 : X1-X2	H3-H2 : X2-X3
Y	yn0	A-C : a1-c1	B-A : b1-a1	C-B : c1-b1
		H1-H3 : X1-X3	H2-H1 : X2-X1	H3-H2 : X3-X2
Y	yn6	A-C : c1-a1	B-A : a1-b1	C-B : b1-c1
		H1-H3 : X3-X1	H2-H1 : X1-X2	H3-H2 : X2-X3
Y	z1	A-BC : a1-b1	B-CA : b1-c1	C-AB : c1-a1
		H1-H2H3 : X1-X2	H2-H3H1 : X2-X3	H3-H1H2 : X3-X1
Y	z3	A-BC : c1-b1	B-CA : a1-c1	C-AB : b1-a1
		H1-H2H3 : X3-X2	H2-H3H1 : X1-X3	H3-H1H2 : X2-X1
Y	z5	A-BC : c1-a1	B-CA : a1-b1	C-AB : b1-c1
		H1-H2H3 : X3-X1	H2-H3H1 : X1-X2	H3-H1H2 : X2-X3
Y	z7	A-BC : b1-a1	B-CA : c1-b1	C-AB : a1-c1
		H1-H2H3 : X2-X1	H2-H3H1 : X3-X2	H3-H1H2 : X1-X3
Y	z9	A-BC : b1-c1	B-CA : c1-a1	C-AB : a1-b1
		H1-H2H3 : X2-X3	H2-H3H1 : X3-X1	H3-H1H2 : X1-X2
Y	z11	A-BC : a1-c1	B-CA : b1-a1	C-AB : c1-b1
		H1-H2H3 : X1-X3	H2-H3H1 : X2-X1	H3-H1H2 : X3-X2
Y	zn1	A-B : n1-b1	B-C : n1-c1	C-A : b1-a1
		H1-H2 : X0-X2	H2-H3 : X0-X3	H3-H1 : X2-X1
Y	zn3	A-B : c1-n1	B-C : a1-n1	C-A : b1-n1
		H1-H2 : X3-X0	H2-H3 : X1-X0	H3-H1 : X2-X0
Y	zn5	A-B : n1-a1	B-C : n1-b1	C-A : n1-c1
		H1-H2 : X0-X1	H2-H3 : X0-X2	H3-H1 : X0-X3
Y	zn7	A-B : b1-n1	B-C : c1-n1	C-A : a1-n1
		H1-H2 : X2-X0	H2-H3 : X3-X0	H3-H1 : X1-X0
Y	zn9	A-B : n1-c1	B-C : n1-a1	C-A : n1-b1
		H1-H2 : X0-X3	H2-H3 : X0-X1	H3-H1 : X0-X2
Y	zn11	A-B : a1-n1	B-C - b1-n1	C-A : c1-n1
		H1-H2 : X1-X0	H2-H3 - X2-X0	H3-H1 : X3-X0
YN	d1	A-N : a1-b1	B-N : b1-c1	C-N : c1-a1
		H1-H0 : X1-X2	H2-H0 : X2-X3	H3-H0 : X3-X1
YN	d3	A-N : c1-b1	B-N : a1-c1	C-N : b1-a1
		H1-H0 : X3-X2	H2-H0 : X1-X3	H3-H0 : X2-X1
YN	d5	A-N : c1-a1	B-N : a1-b1	C-N : b1-c1

HV	LV	A	B	C
		H1-H0 : X3-X1	H2-H0 : X1-X2	H3-H0 : X2-X3
YN	d7	A-N : b1-a1	B-N : c1-b1	C-N : a1-c1
		H1-H0 : X2-X1	H2-H0 : X3-X2	H3-H0 : X1-X3
YN	d9	A-N : b1-c1	B-N : c1-a1	C-N : a1-b1
		H1-H0 : X2-X3	H2-H0 : X3-X1	H3-H0 : X1-X2
YN	d11	A-N : a1-c1	B-N : b1-a1	C-N : c1-b1
		H1-H0 : X1-X3	H2-H0 : X2-X1	H3-H0 : X3-X2
YN	y0	A-C : a1-c1	B-C : b1-a1	C-B : c1-b1
		H1-H3 : X1-X3	H2-H3 : X2-X1	H3-H2 : X3-X2
YN	y6	A-C : c1-a1	B-A : a1-b1	C-B : b1-c1
		H1-H3 : X3-X1	H2-H1 : X1-X2	H3-H2 : X2-X3
YN	yn0	A-N : a1-n1	B-N : b1-n1	C-N : c1-n1
		H1-H0 : X1-X0	H2-H0 : X2-X0	H3-H0 : X3-X0
YN	yn6	A-N : n1-a1	B-N : n1-b1	C-N : n1-c1
		H1-H0 : X0-X1	H2-H0 : X0-X2	H3-H0 : X0-X3
YN	z1	A-N : a1-b1	B-N : b1-c1	C-N : c1-a1
		H1-H0 : X1-X2	H2-H0 : X2-X3	H3-H0 : X3-X1
YN	z3	A-N : c1-b1	B-N : a1-c1	C-N : b1-a1
		H1-H0 : X3-X2	H2-H0 : X1-X3	H3-H0 : X2-X1
YN	z5	A-N : c1-a1	B-N : a1-b1	C-N : b1-c1
		H1-H0 : X3-X1	H2-H0 : X1-X2	H3-H0 : X2-X3
YN	z7	A-N : b1-a1	B-N : c1-b1	C-N : a1-c1
		H1-H0 : X2-X1	H2-H0 : X3-X2	H3-H0 : X1-X3
YN	z9	A-N : b1-c1	B-N : c1-a1	C-N : a1-b1
		H1-H0 : X2-X3	H2-H0 : X3-X1	H3-H0 : X1-X2
YN	z11	A-N : a1-c1	B-N : b1-a1	C-N : c1-b1
		H1-H0 : X1-X3	H2-H0 : X2-X1	H3-H0 : X3-X2
YN	zn1	A-N : a1-b1	B-N : b1-c1	C-N : c1-a1
		H1-H0 : X1-X2	H2-H0 : X2-X3	H3-H0 : X3-X1
YN	zn3	A-N : c1-b1	B-N : a1-c1	C-N : b1-a1
		H1-H0 : X3-X2	H2-H0 : X1-X3	H3-H0 : X2-X1
YN	zn5	A-N : c1-a1	B-N : a1-b1	C-N : b1-c1
		H1-H0 : X3-X1	H2-H0 : X1-X2	H3-H0 : X2-X3
YN	zn7	A-N : b1-a1	B-N : c1-b1	C-N : a1-c1
		H1-H0 : X2-X1	H2-H0 : X3-X2	H3-H0 : X1-X3
YN	zn9	A-N : b1-c1	B-N : c1-a1	C-N : a1-b1
		H1-H0 : X2-X3	H2-H0 : X3-X1	H3-H0 : X1-X2
YN	zn11	A-N : a1-c1	B-N : b1-a1	C-N : c1-b1
		H1-H0 : X1-X3	H2-H0 : X2-X1	H3-H0 : X3-X2
Z	y1	A-C : a1-c1	B-A : b1-a1	C-B : c1-b1

HV	LV	A	B	C
		H1-H3 : X1-X3	H2-H1 : X2-X1	H3-H2 : X3-X2
Z	y3	B-C : a1-b1	C-A : b1-c1	A-B : c1-a1
		H2-H3 : X1-X2	H3-H1 : X2-X3	H1-H2 : X3-X1
Z	y5	A-B : b1-a1	B-C : c1-b1	C-A : a1-c1
		H1-H2 : X2-X1	H2-H3 : X3-X2	H3-H1 : X1-X3
Z	y7	A-C : c1-a1	B-A : a1-b1	C-B : b1-c1
		H1-H3 : X3-X1	H2-H1 : X1-X2	H3-H2 : X2-X3
Z	y9	B-C : b1-a1	C-A : c1-b1	A-B : a1-c1
		H2-H3 : X2-X1	H3-H1 : X3-X2	H1-H2 : X1-X3
Z	y11	A-B : a1-b1	B-C : b1-c1	C-A : c1-a1
		H1-H2 : X1-X2	H2-H3 : X2-X3	H3-H1 : X3-X1
Z	yn1	A-C : a1-n1	B-A : b1-n1	C-B : c1-n1
		H1-H3 : X1-X0	H2-H1 : X2-X0	H3-H2 : X3-X0
Z	yn3	B-C : a1-n1	C-A : b1-n1	A-B : c1-n1
		H2-H3 : X1-X0	H3-H1 : X2-X0	H1-H2 : X3-X0
Z	yn5	A-B : n1-a1	B-C : n1-b1	C-A : n1-c1
		H1-H2 : X0-X1	H2-H3 : X0-X2	H3-H1 : X0-X3
Z	yn7	A-C : n1-a1	B-A : n1-b1	C-B : n1-c1
		H1-H3 : X0-X1	H2-H1 : X0-X2	H3-H2 : X0-X3
Z	yn9	B-C : n1-a1	C-A : n1-b1	A-B : n1-c1
		H2-H3 : X0-X1	H3-H1 : X0-X2	H1-H2 : X0-X3
Z	yn11	A-B : a1-n1	B-C : b1-n1	C-A : c1-n1
		H1-H2 : X1-X0	H2-H3 : X2-X0	H3-H1 : X3-X0
ZN	y1	A-C : a1-c1	B-A : b1-a1	C-B : c1-b1
		H1-H3 : X1-X3	H2-H1 : X2-X1	H3-H2 : X3-X2
ZN	y3	B-C : a1-b1	C-A : b1-c1	A-B : c1-a1
		H2-H3 : X1-X2	H3-H1 : X2-X3	H1-H2 : X3-X1
ZN	y5	A-B : b1-a1	B-C : c1-b1	C-A : a1-c1
		H1-H2 : X2-X1	H2-H3 : X3-X2	H3-H1 : X1-X3
ZN	y7	A-C : c1-a1	B-A : a1-b1	C-B : b1-c1
		H1-H3 : X3-X1	H2-H1 : X1-X2	H3-H2 : X2-X3
ZN	y9	B-C : b1-a1	C-A : c1-b1	A-B : a1-c1
		H2-H3 : X2-X1	H3-H1 : X3-X2	H1-H2 : X1-X3
ZN	y11	A-B : a1-b1	B-C : b1-c1	C-A : c1-a1
		H1-H2 : X1-X2	H2-H3 : X2-X3	H3-H1 : X3-X1
ZN	yn1	A-C : a1-n1	B-A : b1-n1	C-B : c1-n1
		H1-H3 : X1-X0	H2-H1 : X2-X0	H3-H2 : X3-X0
ZN	yn3	B-C : a1-n1	C-A : b1-n1	A-B : c1-n1
		H2-H3 : X1-X0	H3-H1 : X2-X0	H1-H2 : X3-X0
ZN	yn5	A-B : n1-a1	B-C : n1-b1	C-A : n1-c1

HV	LV	A	B	C
		H1-H2 : X0-X1	H2-H3 : X0-X2	H3-H1 : X0-X3
ZN	yn7	A-C : n1-a1	B-A : n1-b1	C-B : n1-c1
		H1-H3 : X0-X1	H2-H1 : X0-X2	H3-H2 : X0-X3
ZN	yn9	B-C : n1-a1	C-A : n1-b1	A-B : n1-c1
		H2-H3 : X0-X1	H3-H1 : X0-X2	H1-H2 : X0-X3
ZN	yn11	A-B : a1-n1	B-C : b1-n1	C-A : c1-n1
		H1-H2 : X1-X0	H2-H3 : X2-X0	H3-H1 : X3-X0
YNa		A-N : a1-N	B-N : b1-N	C-N : c1-N
		H1-H0 : X1-H0	H2-H0 : X2-H0	H3-H0 : X3-H0

14.5 TR Winding Resistance

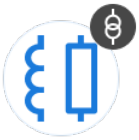

The **TR Winding Resistance** measurement is performed to assess possible damages in windings or contact problems between bushings and windings, windings and tap changer, and more.

⚠ DANGER

Death or severe injury caused by high voltage or current

Injecting direct current into test objects with inductive characteristics will charge the winding of the test object.

- ▶ Never open the measuring circuit while current is flowing.
- ▶ After a measurement, wait until the *CPX 200* has discharged completely.
- ▶ Ground all terminals of the test object before touching the test setup.
- ▶ Short-circuit the terminals before disconnecting the test leads.
- ▶ Disconnect cables not used for testing both from the test object and the *CPX 200*.
- ▶ If the measurement is interrupted due to, for example, an unexpected loss of supply voltage or erroneous behavior of the *CPX 200*, do not touch the test setup until the energy has dissipated over time. Note that the length of time depends heavily on the test object.

NOTICE

Equipment damage due to infeed possible

- ▶ Always ensure that the *CPX 200* is connected to the tap changer last.

For more information related to the **TR Winding Resistance** test, refer to the following sections:

- Safety (page 13)
- CPX 200 safety functions and components (page 20)
- Wiring and operation (page 84)
- Power transformer (page 89)
- Handling the 1 000 A AC/DC High Current Module cables (page 30)
- Assessment rules (page 62)

14.5.1 Test setup

The wiring diagram will adjust according to the following settings:

- **Number of windings**
- **Number of phases**
- **Vector group**
- **Output**

The figure below illustrates a typical setup for a **TR Winding Resistance** measurement.

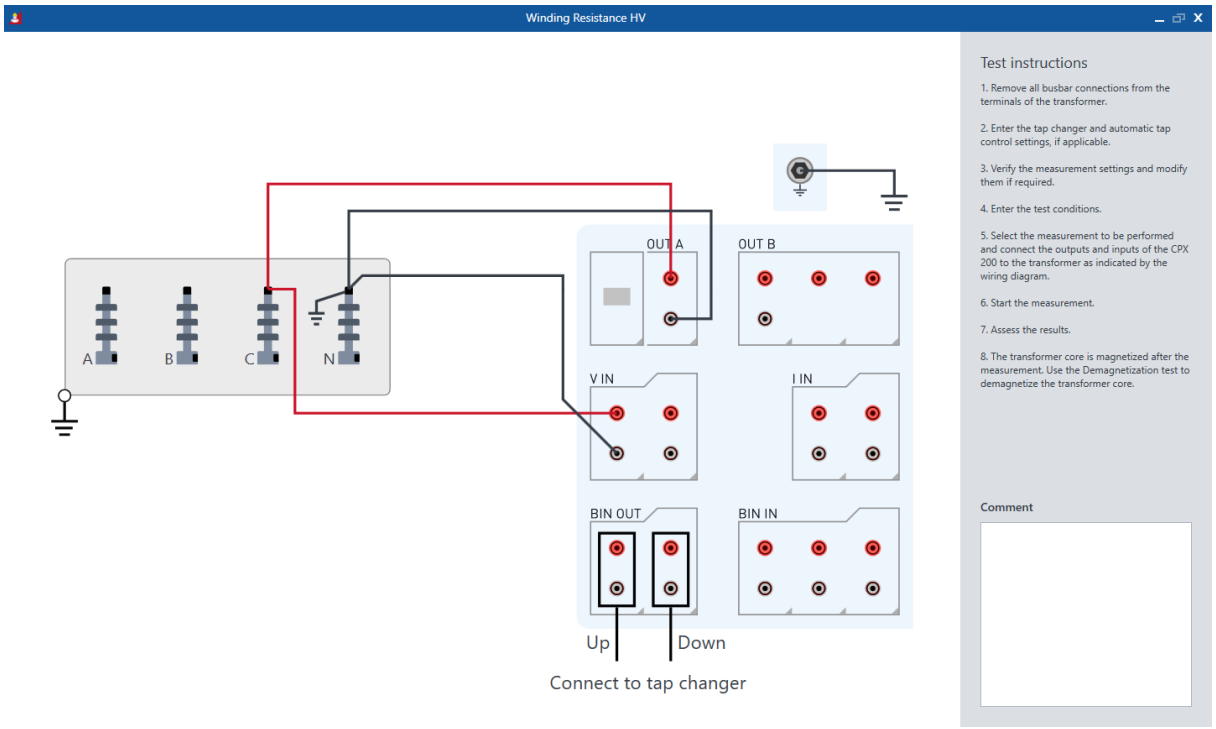

Figure 14-10: **TR Winding Resistance** measurement wiring

The measurement can be performed either with the **HC OUT** output, which can go up to 100 A_{DC} and is available when a **High Current Module** is installed in the *CPX 200*, or with the **OUT A** output, which operates within the **12 A DC**, **20 A DC**, or **32 A DC** range.

The **OUT A** output is the recommended choice for measuring winding resistance values from 10 mΩ and above, while the **HC OUT 100 A DC** output is ideal for measurements within the µΩ range.

14.5.2 Settings and conditions

The following measurement settings and conditions are applicable for *CPXpert* as well as *TouchControl*.

Table 14-18: Available settings for the **TR Winding Resistance** test

Settings data	Description
Winding under test	Winding on which the **TR Winding Resistance** test shall be performed. The availability of combinations depends on the selected number of windings
Rated current	Standard current at the middle position of the tap changer in use. When filled out, the *CPX 200* attempts to apply 10 % of the rated current as the test current, with a maximum limit of **20 A DC**. If not filled out, a default target test current of **5 A DC** will be used.
Material	Composition of the transformer winding, which could be either **Copper** or **Aluminum**. Depending on this selection, a different temperature correction factor will be used.

Settings data	Description
Output range	**Default option:** • **20 A (OUT A)** The **20 A (OUT A)** output is the ideal setting for testing winding resistance values in the milliohm (mΩ) range and above. **Alternative options:** • **HC OUT (100 A)** The **HC OUT (100 A)** output is the ideal setting for testing winding resistance values in the milliohm (µΩ) range. • **OUT A (32 A)** • **OUT A (12 A)**
Test current	Target test current
Measurement	**Available when the 3-phase measurement is chosen under Phases in the Transformer tile.** The **Measurement** tile allows you to select the phase under test. Depending on the selected phase and the defined transformer vector group, the necessary terminal combination for **OUT A** and **V IN1** will be indicated. The wiring follows the IEEE wiring recommendation.
Auto keep	**Default option:** • **Auto keep** = **On** By default, **Auto keep** is enabled. This means that the *CPX 200* will automatically record measurement results, once stable measurement conditions have been achieved. **Alternative option:** • **Auto keep** = **Off** In this mode, the operator has the flexibility to record the measurement results when they deem appropriate, using the **Keep** button located within the live bar.
R stable	Tolerance for the deviation of measurement results within the **Settling time**. The stabilization criteria of the resistance, denoted as **R stable**, is calculated based on the deviation between the minimum and maximum measured resistance values within the **Settling time**. If the deviation is above the defined tolerance **R stable**, the result is recorded. 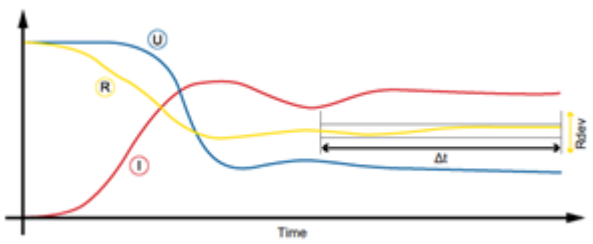
Settling time	Time during which the deviation of measurement results is evaluated. If the deviation is above the defined tolerance **R stable**, the result is recorded

Settings data	Description
Auto tap control	**Default option:** • **Auto tap control** = **On** The *CPX 200* switches between taps. **Alternative option:** • **Auto tap control** = **Off** The tap position must be selected manually in the **Tap position** drop-down list (only available when **Auto tap control** is **Off**).
Tap position	**Only available when Auto tap control is Off** Drop-down list to manually select the tap position.
Impulse time	**Only available when Auto tap control is On** Duration of the impulse triggering the tap change
Tap time	**Only available when Auto tap control is On** Time for the change between 2 tap positions
Start tap	**Only available when Auto tap control is On** Start tap position of the test.
Stop tap	**Only available when Auto tap control is On** Stop tap position of the test **Note:** The taps can be switched through upwards or downwards.
Up/down test	**Default option:** • **Up/down test** = **Off** **Alternative option:** • **Up/down test** = **On** The test is run in 2 directions (up and down). Up means from the lowest tap to the highest tap while down means from the highest tap to the lowest tap.

Settings data	Description
Temperature correction	Select the checkbox to use **Temperature correction** for this test. Depending on selected material, the following formulas will be used to correct the temperature. **Copper** • **Centigrade** $R_{ref} = \frac{V_{in}}{I_{out}} \times \frac{235 + T_{ref}}{235 + T_{meas}}$ • **Fahrenheit** $R_{ref} = \frac{V_{in}}{I_{out}} \times \frac{391 + T_{ref}}{391 + T_{meas}}$ **Aluminum** • **Centigrade** $R_{ref} = \frac{V_{in}}{I_{out}} \times \frac{225 + T_{ref}}{225 + T_{meas}}$ • **Fahrenheit** $R_{ref} = \frac{V_{in}}{I_{out}} \times \frac{373 + T_{ref}}{373 + T_{meas}}$ Where: • R_{ref} is the temperature-corrected resistance value. • V_{in} is the input voltage. • I_{in} is the input current. • T_{ref} is the specified reference temperature. • T_{meas} is the recorded winding temperature.
Temperature	Temperature of the transformer's winding
Reference temperature	Reference temperature to be used for temperature correction

The following automatic assessment rules can be utilized in *CPXpert*.

Table 14-19: Available assessment rules for the **TR Winding Resistance** test

Assessment rule	Description
Auto assessment	**Default option:** • **Auto assessment** = **On** The test results will be automatically evaluated based on the specified limits. **Note:** These automatic assessments can be manually overridden if necessary. **Alternative option:** • **Auto assessment** = **Off** The test results can be evaluated manually.
Tolerable Δ ABC	Test results are marked as **Pass** if the calculated phase-to-phase comparison is below the specified limit.

14.5.3 Measurement data

Table 14-20: Measurement data for the **TR Winding Resistance** test

Data	Description
No.	Number of the measurement
Tap	Identification of the tap changer position under test
Measurement	Arrangement of the measurement **Note:** The **Measurement** field appears only when **Phases** = **3** is selected in the **Transformer** tile.
Time	Elapsed time per measurement
R meas.	Measured resistance $R_{meas} = \frac{V_{in}}{I_{in}}$ **Note:** When temperature correction factors are utilized, the measured resistance values are adjusted by multiplying them with the designated correction factor.
I out	Measured current within the transformer winding based on **OUT A** or **HC Out**
V in	Measured voltage based on **V IN**
R stable	Resistance stable in % between the maximum and the minimum measured values evaluated within the last 10 seconds of the measurement. $R_{stable} = 100\,\% - R_{dev}$
Δ ABC	Comparison of measured resistance values per tap changer position $Phase\,A = 100\,\% \times \left\lvert \frac{Phase\,A - Phase\,B}{Phase\,A} \right\rvert$ $Phase\,B = 100\,\% \times \left\lvert \frac{Phase\,B - Phase\,C}{Phase\,B} \right\rvert$ $Phase\,C = 100\,\% \times \left\lvert \frac{Phase\,C - Phase\,A}{Phase\,C} \right\rvert$ **Note:** When performing an **Up/Down test**, the corresponding values will be taken in order. This means all the ‘up’ values will be used for ‘up’ and all the ‘down’ values for ‘down’.
Assessment	Assessment of the measurement point

14.5.4 Testing recommendations

- The test current should not exceed 10 % (IEC) or 15 % (IEEE) of the rated winding current. This could cause erroneous readings due to heating of the winding.
- Cleaning cycles respectively performing multiple winding resistance tests in a row can improve measurement results. Especially impurities on seldom used tap changer positions can increase the measured resistance. Repeated high-current testing with tap changer operation across all taps can clean the contacts from the impurities.

  Note: To perform 2 measurement cycles in a row, the **Up/Down** test switch in *CPXpert* can be utilized.
- It may be necessary to set **Auto keep** to **Off** when testing five-limb transformers. The inner limbs often saturate first, which can lead to stable but incorrect resistance values. Setting **Auto keep** to **Off** allows the measurement to continue until the outer limbs are magnetized as well.
- When the last measurement is conducted on **Phase B** respectively via the **B** measurement selector, the **TR Demagnetization** test afterwards can be performed without the need for additional rewiring effort.

14.6 TR Demagnetization



Whenever a power transformer is isolated from the power system, residual magnetism remains in its core due to a phase shift. Due to residual magnetism in the core, high inrush currents, up to the maximum short-circuit current can occur. This puts undesired stress on the transformer when it is switched back into service. In addition, many diagnostic measurements can be affected by residual magnetism, making a reliable assessment very difficult. Therefore, it is recommended to demagnetize the core before switching the transformer back into service and after DC voltages have been applied during diagnostic testing.

⚠ DANGER

Death or severe injury caused by high voltage or current

Injecting direct current into test objects with inductive characteristics will charge the winding of the test object.

- ▶ Never open the measuring circuit while current is flowing.
- ▶ After a measurement, wait until the *CPX 200* has discharged completely.
- ▶ Ground all terminals of the test object before touching the test setup.
- ▶ Short-circuit the terminals before disconnecting the test leads.
- ▶ Disconnect cables not used for testing both from the test object and the *CPX 200*.
- ▶ If the measurement is interrupted due to, for example, an unexpected loss of supply voltage or erroneous behavior of the *CPX 200*, do not touch the test setup until the energy has dissipated over time. Note that the length of time depends heavily on the test object.

For more information related to the **TR Demagnetization** test, refer to the following sections:

- Safety (page 13)
- CPX 200 safety functions and components (page 20)
- Wiring and operation (page 84)
- Power transformer (page 89)
- Handling the 1 000 A AC/DC High Current Module cables (page 30)
- Assessment rules (page 62)

14.6.1 Test setup

The wiring diagram will adjust according to the following settings:

- **Number of windings**
- **Number of phases**
- **Vector group**

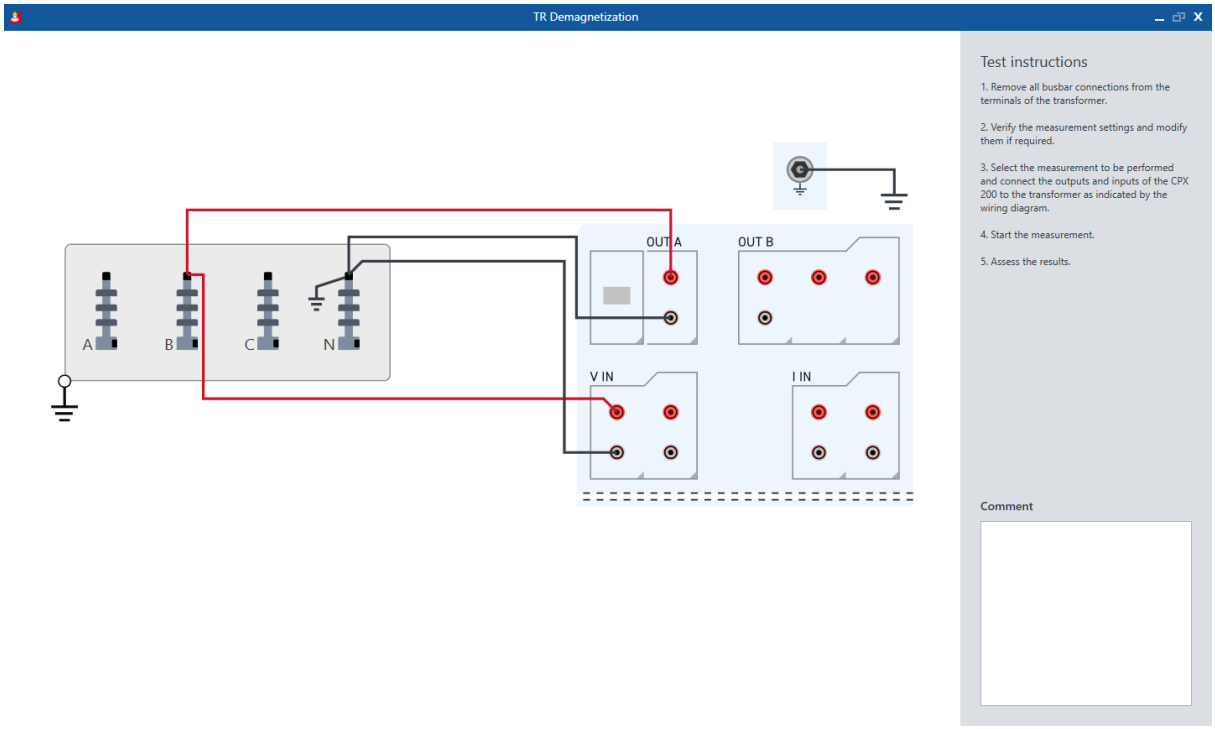

Figure 14-11: **TR Demagnetization** wiring

14.6.2 Settings and conditions

The following measurement settings and conditions are applicable for *CPXpert* as well as *TouchControl*.

Table 14-21: Overview of the available settings within *CPXpert* and *TouchControl* for the **TR Demagnetization** test

Settings data	Description
Rated current (HV)	**Rated current (HV)** refers to the standard current at the middle position of the tap changer in use. When filled out, the *CPX 200* attempts to apply 10 % of the rated current as the test current, with a maximum limit of **20 A DC**. If not filled out, a default target test current of **5 A DC** will be used.

14.6.3 Measurement data

Table 14-22: Measurement data for the **TR Demagnetization** test

Data	Description
No.	Number of the measurement **Note:** The **No.** field is only available in *CPXpert*. *TouchControl* only supports performing 1 measurement per test.
Comment	Comment for the measurement
Measurement	**Default option:** • **Measurement = B** Typically, it is sufficient to perform demagnetization only on the middle limb. **Alternative options:** • **Measurement = A or C** For a five-limb transformer, it may be necessary to first demagnetize the outer limbs using the phase selectors A and C, before demagnetizing the middle limb via the phase selector B. **Note:** The **Measurement** field selection is only available in *CPXpert*. *TouchControl* only supports performing this measurement on the middle limb. **Note:** The **Measurement** field appears only when **Phases** = **3** is selected in the **Transformer** tile.
Result	Status of power transformer demagnetization: • **Not Performed**: The demagnetization process has not been initiated. • **Running**: The demagnetization process is currently in progress. • **Incomplete**: The demagnetization process started but was not completed successfully. • **Demagnetized**: The demagnetization process has been successfully completed.
Residual magnetism	Remaining measured magnetism in percent
Assessment	Assessment of the measurement point

14.6.4 Demagnetization principle

The relationship between the applied magnetic field strength (H), which is a function of the injected current, and the induced magnetic flux density (B) is visualized by the hysteresis loop. It is generated by measuring the magnetic flux of a ferromagnetic material while the magnetic field strength is changed.

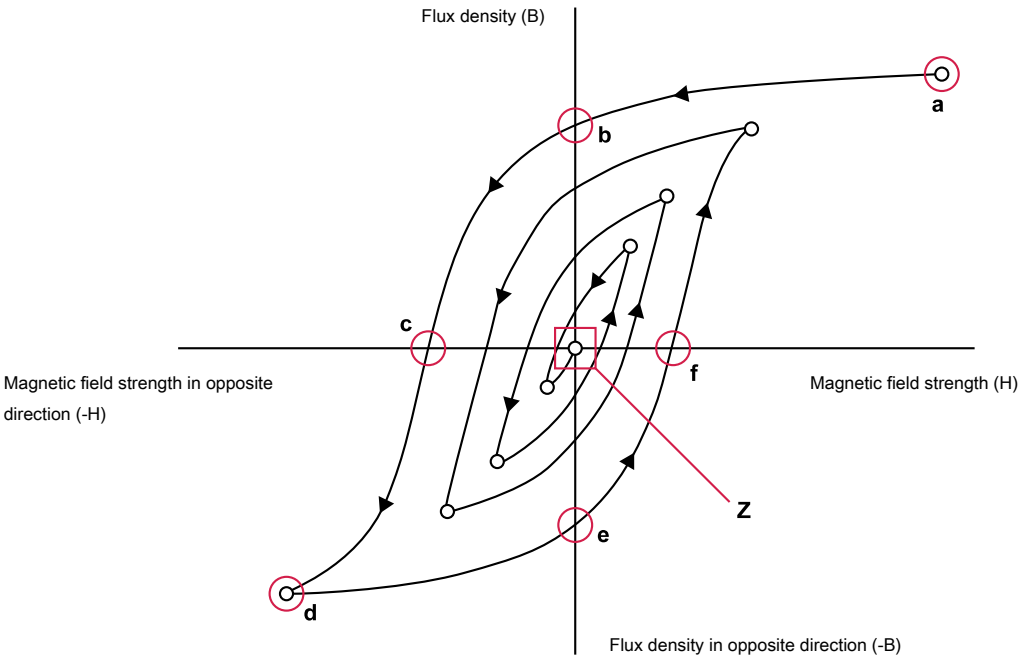

Figure 14-12: Example of a hysteresis loop visualizing the demagnetization process

B and H are applied to saturate the core in the positive and negative direction. During the demagnetization process, the remanence follows the line of the hysteresis loop. In the first 2 steps (towards points a and b), the transformer core is saturated to reach a threshold close to 100 %. While b and e mark the remanent flux density, c and f designate the coercive field strength.

The test current should not exceed a value of between 10 and 15 % of the transformer's nominal current.

14.7 TR Short-Circuit Impedance/Leakage Reactance



The short-circuit impedance / leakage reactance value, as specified by transformer manufacturers, represents the voltage at rated frequency that must be applied to the primary winding to measure the rated current in the short-circuited secondary winding.

This test is only available in *CPXpert*.

The test name and assessment parameters depend on the selected standard in *CPXpert*:
• IEC: **TR Short-circuit Impedance**
• IEEE: **TR Leakage Reactance**

In this section, the IEC naming conventions will be used.

For more information related to the **TR Short-Circuit Impedance** test, refer to the following sections:

- Safety (page 13)
- CPX 200 safety functions and components (page 20)
- Wiring and operation (page 84)
- Power transformer (page 89)
- Assessment rules (page 62)

⚠ DANGER

Death or severe injury caused by high voltage or current

▶ If the measurement is interrupted due to, for example, an unexpected loss of supply voltage or erroneous behavior of the *CPX 200*, do not touch the test setup until the energy has dissipated over time. Note that the length of time depends heavily on the test object.

14.7.1 Test setup

CPXpert supports performing the three-phase equivalent **TR Short-Circuit Impedance** / **TR Leakage Reactance** test.

A three-phase power transformer can be tested using a single-phase power source by applying the voltage to each of the 2 terminals of the non-short-circuited windings.

Three successive measurements must be conducted for all 3 phases at rated frequency.

The figure below shows a standard arrangement for measuring a power transformer's short-circuit impedance or leakage reactance. The procedure involves injecting current through **OUT A** on the test winding and measuring the resulting voltage with **V IN1**.

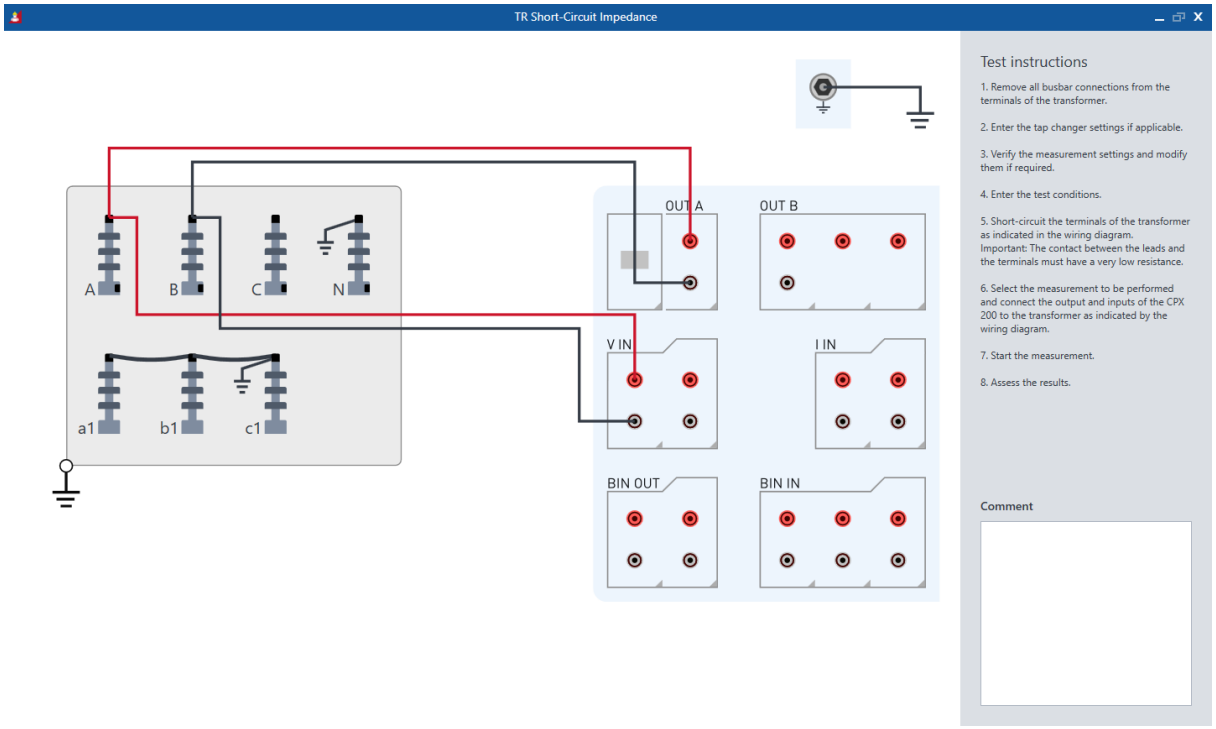

Figure 14-13: **TR Short-Circuit Impedance** / **TR Leakage Reactance** measurement wiring with **OUT A**

To ensure accurate measurements, it is crucial that the short-circuit lead be arranged with the minimum possible test lead impedance. This helps mitigate any potential sources of error that could interfere with the precision of the short-circuit impedance or leakage reactance readings.

14.7.2 Settings and conditions

The following measurement settings and conditions are applicable for *CPXpert*.

Table 14-23: Available settings within *CPXpert* for the **TR Short-Circuit Impedance** test

Settings	Description
Test current	Target test current
Test frequency	Target test frequency **Note:** It is imperative to consider the rated frequency of the power transformer when establishing the target frequency for the test. This alignment ensures that the measurements are consistent with the actual operating conditions of the transformer.
Temperature correction	Select the checkbox to use temperature correction for this test. Depending on the selected material, the following formulas will be used to correct the temperature of the resistance results. **Copper** • **Centigrade** $R_{ref} = \frac{V_{in}}{I_{out}} \times \frac{235 + T_{ref}}{235 + T_{meas}}$ • **Fahrenheit** $R_{ref} = \frac{V_{in}}{I_{out}} \times \frac{391 + T_{ref}}{391 + T_{meas}}$ **Aluminum** • **Centigrade** $R_{ref} = \frac{V_{in}}{I_{out}} \times \frac{225 + T_{ref}}{225 + T_{meas}}$ • **Fahrenheit** $R_{ref} = \frac{V_{in}}{I_{out}} \times \frac{373 + T_{ref}}{373 + T_{meas}}$ Where: • R_{ref} is the temperature-corrected resistance value. • V_{in} is the input voltage. • I_{in} is the input current. • T_{ref} is the specified reference temperature. • T_{meas} is the recorded winding temperature.
Temperature	Temperature of the transformer's winding
Reference temperature	Reference temperature to be used for temperature correction

The following automatic assessment rules can be utilized in *CPXpert*.

Table 14-24: Available assessment rules in *CPXpert* for the **TR Short-Circuit Impedance** test

Assessment rule	Description
Auto assessment	**Default option:** • **Auto assessment** = **On** The test results will be automatically evaluated based on the specified limits. **Note:** These automatic assessments can be manually overridden if necessary. **Alternative option:** • **Auto assessment** = **Off** The test results can be evaluated manually.
Tolerable zk dev (+/-)	Test results are marked as **Pass** if the measured short-circuit impedance zk is below the specified limit. According to IEEE Std. C57.152, the 3 phase-equivalent results should be within 3 % of the nameplate value.

14.7.3 Measurement data

Table 14-25: Measurement data in *CPXpert* for the **TR Short-Circuit Impedance** test for three-phase-equivalent measurements

Data	Description
Measurement	Arrangement of the measurement
I out	Measured current based on **OUT A**
V in	Measured voltage based on **V IN1**
Phase	Measured phase shift between **OUT A** and **V IN1**
R	Real part of the measured **Z** This represents the resistive component of the transformer's impedance. It accounts for the copper losses in the windings when current flows through them.
X	Imaginary part of the measured **Z** This is the reactive component of the impedance, primarily due to the leakage inductance of the transformer windings
Z	Measured short-circuit impedance/leakage inductance $Z_K = \sqrt{R_k^2 + X_k^2}$
Z ref	Reference short-circuit impedance
Z dev	Deviation of the measured short-circuit impedance from the reference short-circuit impedance

The following table describes the assessment Z.

Data	Description
R	Average of Rk across all phases
X	Average of Xk across all phases
Z	Average of Zk across all phases
uk ref	Rated short-circuit impedance of the power transformer based on the nameplate entry

Data	Description
uk calc	The calculated short-circuit impedance based on: $Z_K\,[\%] = \frac{Z_A + Z_B + Z_C}{3} \times \frac{S_N}{U_N{}^2}$ Where: • Z_A, Z_B, Z_C represent the measured short-circuit impedance or leakage reactance per phase. These values can be calculated after all measurements have been completed, like in the following example for a three-phase transformer. $Z_A = \frac{Z_{AB} - Z_{BC} + Z_{CA}}{2} = \frac{Z_A + Z_B - Z_B - Z_C + Z_C + Z_A}{2} = \frac{2 \times Z_A}{2}$ Note that the impedances Z_B and Z_C can be calculated analogously. • S_N is the base power of the injected winding, usually corresponding to the transformer's rated power. • U_N is the base voltage of the injected winding, generally matching the transformer's rated voltage of the specified tap position.
uk dev	Deviation of the calculated **uk calc** (%) from the rated **uk ref** (%) in percent
Assessment	Assessment of **uk calc**

15 Switchgear

This section lists the switchgear tests available for the *CPX 200* in both *CPXpert* and *TouchControl*.

▶ For details on safely performing tests, refer to Safety instructions (page 14) and Wiring and operation (page 84).

15.1 SG Timing



The **SG Timing** test measures the contact timing of the switchgear. Depending on the selected sequence, the opening time, closing time, close-open time, and more are automatically calculated.

For more information related to the **SG Timing** test, refer to the following sections:

- Safety (page 13)
- CPX 200 safety functions and components (page 20)
- Wiring and operation (page 84)
- Switchgear (page 101)

NOTICE

Equipment damage or loss of data possible

▶ Never connect the *CPX 200* between the respective AUX contacts of the trip and close coils and the coils themselves since these contacts assure that the voltage is not applied too long to the coils.

▶ Do not connect the DC coils with false polarity to prevent damaging the free running diodes.

▶ Always observe the right polarity of the DC coils.

▶ Always ensure that the *CPX 200* is connected to live parts of the asset last.

15.1.1 Test setup

There are several options available for conducting **SG Timing** measurements. The wiring diagram will adjust according to the following settings:

- **Phases**: Determines the **OUT B** wiring to the main contacts.
- **Interrupters per Phase**: Determines the **OUT B** wiring to the main contacts**.**
- **Pole operation**
- **Sequence**: Determines which **BIN OUT** socket needs to be used for the trip or close coil supply.
- **Sample rate**

- **Supply Source**: Determines if the coils are supplied by the *CPX 200* or an external supply.
- **External voltage supply measurement**: For sequences involving close operations, the external voltage supply measurement is used for reading the voltage for motor and coil supply (only when an external source is used).
- **Timing Options**: The **OUT B** wiring to the main contacts determines whether the timing of the complete phase or the timing of each interrupter is measured.

Table 15-1: Available Timing wiring options with the *CPX 200*

Supply source	*CPX 200*	External
Main contacts	**Ungrounded side: OUT B123** **Grounded side: BIN OUT**	**Ungrounded side: OUT B123** **Grounded side: BIN OUT**
Coil supply	**Trip coil: OUT A** via **BIN OUT1** **Close coil: OUT A** via **BIN OUT2** **Note:** The *CPX 200* can provide a coil supply up to 85 V_{AC} and 125 V_{DC}.	**Trip coil: BIN OUT1** **Close coil: BIN OUT2** **Note:** The plus side of the external is connected to the neutral of the **BIN OUT**
Auxiliary contacts	**Trip 52a: BIN IN1** **Close 52b: BIN IN2**	**Trip 52a: BIN IN1** **Close 52b: BIN IN2**
Motor current	**V IN1** via current clamp	**V IN1** via current clamp
External voltage supply measurement	**V IN2** for motor analysis results	**V IN2** for motor analysis results

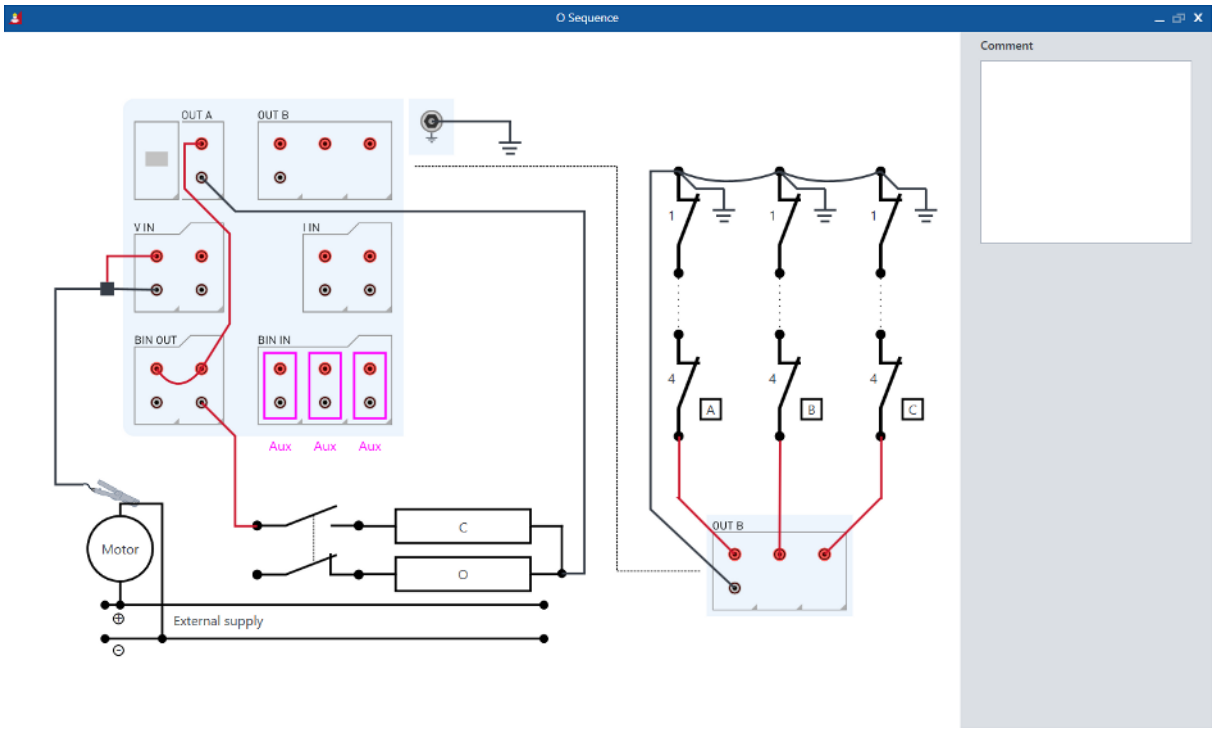

Figure 15-1: Timing open sequence wiring for a 3-phase switchgear with 3 interrupters and motor supply via the *CPX 200*

15.1.2 Settings and condition

15.1.2.1 Sequence

This defines the sequence of switchgear operations to be tested, each with a specific purpose:

- **O**: Represents the open operation of the switchgear.
- **C**: Represents the close operation of the switchgear.
- **O-C**: Measures a rapid closure following a short-circuit trip to restore the current.
- **CO**: Measures a trip on a short circuit after a close operation. The switchgear must open immediately.
- **O-CO**: Measures the reclose operation on a short circuit. The breaker should successfully clear the fault.
- **CO-CO**, **O-CO-CO**: Simulates multiple closures after short-circuit trips with the aim of restoring the current, in the hope that the short-circuit has been cleared.

You can access the detailed view by clicking on the ▪▪▪ button. This allows you to configure the individual times for each state.

When the supply source is configured to the *CPX 200*, the trip coils will be supplied within the time range indicated by the fields marked in red.

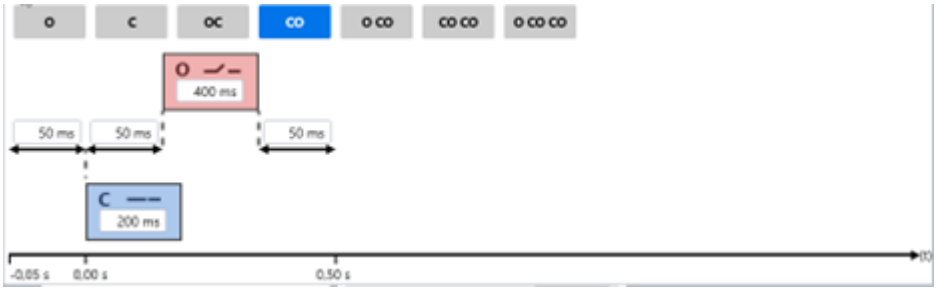

15.1.2.2 Coil supply

Field	Description
Supply source	Determines whether an **External** supply such as a station battery, or the *CPX 200*, is used to power the trip coils.
Test voltage	**Note:** This option is only available when **CPX 200** is selected as the supply source. It defines the test voltage provided by the *CPX 200* to the trip coils. Configurations can be made for up to 120 V_{DC} and 85 V_{AC}.
Signal mode	**Note:** This option is only available when **CPX 200** is selected as the supply source. The signal mode determines whether the *CPX 200* test voltage utilizes an **AC** or **DC** power supply.
Frequency	**Note:** This option is only available when **CPX 200** is selected as the supply source and **AC** is selected as the signal mode. **Frequency** determines the frequency injected by the test voltage output from the *CPX 200*.

Field	Description
Trip coil under test	Specifies the trip coil being measured. If an independent pole operation is in effect and all phases are to be measured simultaneously, the **Phase under test** should be selected as **All**. In this case, the affected trip coils should be connected in parallel between all 3 phases. **Note:** This field is only visible for sequences with an open operation and when multiple trip coils are defined.
Phase under test	Specifies the phase for coil supply. **Note:** This field is only visible when **Independent** has been selected from the **Pole operation** drop-down list in the **Sequence** tile. ▶ For single-phase supply, deselect the unsupported channels in the **Main contacts** tile. ▶ Select the channel corresponding to the active phase: Phase **A**: **OUT B1** Phase **B**: **OUT B2** Phase **C**: **OUT B3**

15.1.3 Measurement data

15.1.3.1 Main contacts

Field	Description
Channel configuration	**Note:** This option is only available when 2 or 3 phases were selected and the **Timing option** is set to **Phase**. Channel configuration determines which phases can be tested within the **SG Timing** test.
Timing option	**Note:** This option is only available when 2 or more interrupters were selected. • The **Phase** option allows for a comparison of the timings across all 3 phases within a single interrupter configuration. • The **Interrupter** option enables a comparison of the timings between 2 adjacent interrupters within the same phase.
Channel	Specifies the **OUT B** output channel in use.
Phase	Specifies the phase under test. **Note:** This setting can only be manually changed when **Interrupter timing** is selected as the **Timing option**.
Interrupter	Specifies the interrupter configuration under test. **Note:** This field is only visible, when more than 1 **Interrupter** per phase has been specified.
Opening/Closing time	**Note:** The field naming depends on the chosen test sequence. • **Opening time**: The time between energizing the open coil (send trip command) and separation of arcing contacts. • **Closing time**: The time between energizing the close coil (send close command) and contact touch of all contacts in all poles.

Field	Description
Assessment	This drop-down menu is used to evaluate the results of the main contact timing measurements, categorizing them as **Pass**, **Fail**, or **Investigate**.
Opening time	The time between energizing the open coil (send trip command) and separation of arcing contacts
Closing time	The time between energizing the close coil (send close command) and contact touch of all contacts in all poles
Close-Open time/Close-Open time 2	The **Close-Open time** (C-O time) refers to the interval between the moment when the contacts touch in the first pole during a closing operation and the moment when the arcing contacts have separated in all poles during the subsequent opening operation.
Open-Close time	The **Open-Close time** (O-C time) refers to the interval between the moment when the contacts separate in the first pole during an opening operation and the moment when the contacts touch in all poles during the subsequent closing operation.
Reclosing time	The **Reclosing time** is the interval between the initiation of the opening time and the moment when the contacts touch in all poles during a reclosing cycle.

The operating times depend on the sequence of the trip and close commands.

The following table describes the operating times for all timing sequences.

Table 15-2: **SG Timing** operating times

Field	Description
Opening/Closing time	**Note:** The field naming depends on the chosen test sequence. • **Opening Time**: This refers to the longest opening time recorded in the measurements. • **Closing Time**: This refers to the longest closing time recorded in the measurements.
Opening/Closing sync.	**Note:** The field naming depends on the chosen test sequence. • **Opening sync**: This refers to the time difference between the longest and shortest opening times. • **Closing sync**: This refers to the time difference between the longest and shortest closing times.
Assessment	This drop-down menu is used to evaluate the results of the main contact timing measurements aggregations, categorizing them as **Pass**, **Fail**, or **Investigate**.

Table 15-3: Overview of the individual and aggregated main contact results for each timing sequence

Test sequence	Individual results data	Aggregated results column
O	**Opening time**	**Opening time** **Opening sync.**
C	**Closing time**	**Closing time** **Closing sync.**

Test sequence	Individual results data	Aggregated results column
OC	**Opening time** **Reclosing time**	**Opening time** **Opening sync.** **Reclosing time**
CO	**Closing time** **Close-Open time**	**Closing time** **Closing sync.** **Close-Open time**
O-CO	**Opening time** **Closing time** **Open-Close time** **Close-Open time**	**Opening time** **Opening sync.** **Closing time** **Closing sync.** **Open-Close time** **Close-Open time**
CO-CO	**Open-Close time** **Close-Open time 1** **Close-Open time 2**	**Open-Close time** **Close-Open time 1** **Close-Open time 2**
O-CO-CO	**Opening time** **Open-Close time** **Close-Open time 1** **Close-Open time 2**	**Opening time** **Opening sync.** **Open-Close time** **Close-Open time 1** **Close-Open time 2**

15.1.3.2 Auxiliary contacts

Field	Description
Channel	The used *CPX 200* **BIN IN** channel
Dry/Wet	Defines if the *CPX 200* **BIN IN** channel is configured as: • **Dry contact** (potential-free) • **Wet contact** (with potential)
Type	Type of the auxiliary contact (a, b, wiper)
Switching time	Closing or opening time of the auxiliary contact depending on its type
Diff. to main	Time difference between the opening or closing of the auxiliary contact and the corresponding main contact
Assessment	This drop-down menu is used to evaluate the results of coil analysis, categorizing them as **Pass**, **Fail**, or **Investigate**.

15.1.3.3 Coil analysis

Coil current analysis of the trip coil provides valuable insights into the behavior of the main contacts during opening and closing sequences, including:

- The electrical properties of the coils, such as the time constant
- The force (for example current proportional to that force) required to trigger the loaded spring
- The correct timing sequence of the auxiliary contacts 52a and 52b

Field	Description
Peak current	The maximum measured coil current value
Average current	The average of the measured motor current within the evaluation interval
Average voltage	The average of the measured motor voltage within the evaluation interval
Minimum voltage	Lowest measured voltage
Resistance	Coil resistance, calculated from the measured voltage and current
Evaluation internval	Time interval for measuring and calculating the **Average coil current**. Usually, a steady state region is selected, a region where the **Inrush current** has declined.
Assessment	This drop-down menu is used to evaluate the results of coil analysis, categorizing them as **Pass**, **Fail**, or **Investigate**.

15.1.3.4 Motor analysis

The motor analysis records the supply voltages and currents of the switchgear charging motor(s).

Phase	Specifies the phase under test. **Note:** This field is only visible when **Independent** has been selected from the **Pole operation** drop-down list in the **Sequence** tile.
Clamp ratio	Selected ratio of the utilized current clamp.
Inrush current	Maximum current drawn by the motor. On a DC motor, the inrush current is usually reached during the start-up phase.
Charging time	Time the motor needs to charge the spring. The spring is used to store energy for a trip or close operation.
Charging current	Average of the measured current within the evaluation interval.
Evaluation interval	Time interval for measuring and calculating the average **Charging current**. Usually, a steady state region is selected, a region where the **Inrush current** has declined.
Assessment	This drop-down menu is used to evaluate the results of motor analysis, categorizing them as **Pass**, **Fail**, or **Investigate**.

15.2 SG Static Contact Resistance



The **SG Static Contact Resistance** test measures the static resistance of the switchgear's main contacts. The test verifies whether the resistance of the main contacts allows current to flow with low losses.

The test can be performed only when the switchgear is closed.

For more information related to the **SG Static Contact Resistance** test, refer to the following sections:

- Safety (page 13)
- CPX 200 safety functions and components (page 20)
- Wiring and operation (page 84)
- Switchgear (page 101)
- Handling the 1 000 A AC/DC High Current Module cables (page 30)

⚠ WARNING

Death or severe injury caused by high voltage or current possible

- ▶ Do not use external power sources for the switchgear's main contacts.
- ▶ During the test, supply the switchgear's main contacts only with the *CPX 200*.

⚠ WARNING

Death or severe injury caused by high voltage or current possible

- ▶ Do not connect anything to the switchgear under test without grounding the switchgear.
- ▶ Always ground the switchgear or both ends on all phases and close the switchgear to have proper grounding between the interrupters.

15.2.1 Test setup

There are several options available for conducting **SG Static Contact Resistance** measurements. The wiring diagram will adjust according to the following settings:

- **Output range**
- **Number of phases**
- **Number of interrupters**
- **Interrupter**

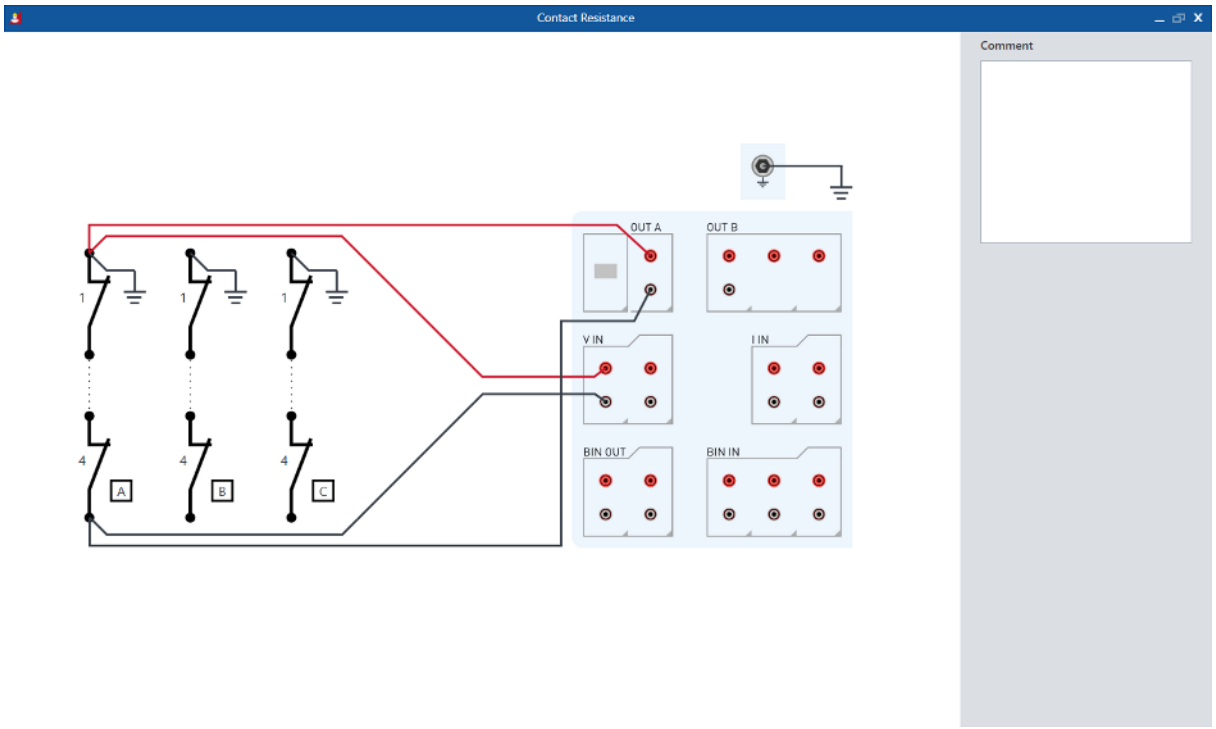

Figure 15-2: **SG Static Contact Resistance** measurement wiring for a three-phase switchgear with 2 interrupters with **HC OUT (1000 A) High Current Module** output

Depending on the chosen output configuration, different accessories are recommended to be used for the **SG Static Contact Resistance** wiring:

Picture		Recommended situation
		**While using OUT A or HC OUT (100 A)** **For OUT A as output:** When using the **OUT A** output, connect the test leads to the first Kelvin clamp 4 mm plug and the voltage sensing lead of the **V IN1** input to the other Kelvin clamp 4 mm plug. **For HC OUT (100 A) as output:** When using the **HC OUT (100 A)** output, connect the test leads from the **High Current Module** to the 6 mm plug of the Kelvin clamp and the voltage sensing lead of the **V IN1** input to one of the Kelvin clamp 4 mm plugs.
		**While using HC OUT (1000 A)** When using the **High Current Module** with the **HC OUT (1000 A)** output, red and black crocodile clips can be used to wire the voltage sensing channel to the switchgear. For accurate readings, it is important that the voltage sense lead is closer to the switchgear than the current test leads.
		

15.2.2 Settings and conditions

The following measurement settings and conditions are applicable for *CPXpert* as well as *TouchControl*.

Table 15-4: Available settings for the **SG Static Contact Resistance** test

Settings data	Description
Phases	The number of phases determines the pre-populates of the measurement table and the appropriate phase selections
Interrupters per phase	The number of interrupters per phase determines the range of selectable combinations available in the Interrupter selection of the measurement table
Output range	**Default option** • **100 A (OUT A)** **OUT A** is an option when there is no **High Current Module** installed into the *CPX 200*. **Alternative options** • **100 A (HC OUT)** Using the **High Current Module 100 A DC** output is the most convenient option for most switchgear with providing sufficient output power and easy cable handling. • **1 kA (HC OUT)** Using the **High Current Module 1000 A DC** output is ideal for testing low-voltage or medium-voltage switchgears. Higher test currents help clean switchgear contact surfaces of dust and other particles through increased temperature exposure.
Test current	Target test current
Ambient temperature	Recording the ambient temperature helps with the documentation of the environmental conditions surrounding the switchgear under test. Since resistance values are temperature-dependent, these recorded temperatures are helpful for accurate comparisons with previous test results, such as factory acceptance results.
Auto keep	**R dev.** refers to the time during which the deviation of measurement results is evaluated. If the deviation is below the defined tolerance **R dev.**, the result is recorded. **Settling time** refers to the tolerance for the deviation of measurement results within the settling time.

15.2.3 Measurement data

Table 15-5: Measurement data for the **SG Static Contact Resistance** test

Data	Description
Phase	Switchgear phase under test **Note:** The **Phase** field appears only when **Phases** = **2** or **Phases** = **3** is selected in the **Switchgear** tile.
Interrupter	Interrupter combination of the selected phase under test **Default option** • **Interrupters** = **All** When **All** is selected, all interrupters per phase are measured to obtain an overall resistance value per phase. **Alternative option** • **Interrupters** individually selectable Alternatively, each interrupter per phase can be tested individually. This stand-alone testing is ideal for diagnostic purposes, allowing the isolation of potentially faulty single interrupters.
I out	Measured current of the switchgear phase based on **OUT A** or **HC OUT**.
V in	Measured voltage based on **V IN1**.
R meas	Measured resistance $R_{meas} = \frac{V_{in}}{I_{out}}$
Assessment	Assessment of the measurement point

15.2.4 Testing recommendation

- When using **HC OUT (1000 A)** to test multiple interrupters per phase individually, it is also possible to set up the current injection at the first and last interrupter, and simply rewire the voltage sensing for each measurement.
- In *CPXpert*, when multiple interrupters per phase are tested individually, the measurement table can be sorted in ascending or descending order based on the **Phase** and **Interrupter** headers using the sort button.

16 Cybersecurity

OMICRON is certified according to ISO/IEC 27001. One of the measures implemented for this certification is the application of the Secure Software Development Life Cycle (SSDLC) process. This ensures that our products are built with security in mind right from the beginning. It involves anything from planning and designing to deployment and maintenance while consistently addressing security concerns (such as threat modeling, risk assessment and management, vulnerability handling and disclosure). By integrating security measures throughout the development process, the SSDLC aims to create cybersecure and trustworthy products.

- You can report any security issues that affect OMICRON products directly via omicronenergy.com/product-security.
- To protect your computer and data, make sure to keep your computer's protection software up to date. This includes but is not limited to a secure system configuration and firewall, virus and malware protection software, and responsible patch management.
- Only load files from trustworthy sources to prevent the introduction of malicious software that could compromise your system's security.
- To protect your local installation, make sure that writing in the program files directory is only possible with administrator rights.
- To protect your device from malicious attacks, make sure you connect it only to secured networks that are protected with firewalls. Do not use it in open environments with direct Internet access. Contact your network administrator for further details regarding your network security.
- Make sure that access to devices and software is restricted to authorized users.
- Contact our OMICRON Product Security Team for further information regarding cybersecurity at OMICRON (→ omicronenergy.com/product-security).

16.1 File protection

The *CPX 200* and *CPXpert* systems safeguard the integrity of generated files through file hashings. Each file is assigned a unique hash value that acts as a cryptographic seal.

A discrepancy between the hash values indicates a modification to the file. *CPXpert* and *TouchControl* will prompt a notification that the altered file will not be loaded.

16.2 Firewall configuration

If you cannot connect to the device, check your firewall configuration. A correct firewall configuration is essential for successful communication between the device and your computer.

Any change to the firewall settings mentioned in this section requires administrator rights on your computer.

Windows firewall

The Windows firewall configuration is carried out automatically during the installation of *CPXpert*. However, in certain cases this may not have immediate effect.

- To prevent the Windows firewall from blocking communication, temporarily disable it via the Windows Control panel.

If the communication is now successfully established, the Windows Firewall was the cause of the blocked communication between the test set and the computer.

▶ Reconfigure the Windows firewall in order to enable a permanent use of the test set without having to disable the Windows firewall.

Third-party firewall

▶ If you are using a firewall other than the Windows firewall, temporarily disable it to see if this firewall may be the cause of the blocked communication.

Numerous computer security programs or anti-virus packages also contain an integrated firewall function. Double-check and, if applicable, remove all such programs that are installed on your computer.

Manual firewall configuration

If you would like to manually configure the firewall settings, the following ports/services have to be open in order to get a functional communication.

Table 16-1: Inbound rules

Program/service name	Rule name	Protocol type	Local Port	Remote Port	Local IP	Remote IP
omcomm.exe	OMICRON Device Detection (In)	UDP	4987 -4988	Any	Any	Any
Any	OMICRON Interprocess Communication (TCP-In)	TCP	Any	Any	127.0.0.0/8	127.0.0.0/8
Any	OMICRON Interprocess Communication (UDP-In)	UDP	Any	Any	127.0.0.0/8	127.0.0.0/8

Table 16-2: Outbound rules

Program/service name	Rule name	Protocol type	Local Port	Remote Port	Local IP	Remote IP
Any	OMICRON Device Detection (ICMP)	ICMPv4	Any	Any	Any	Any
omcomm.exe	OMICRON Device Detection (Out)	UDP	Any	Any	Any	4988
DeviceLink.exe	OMICRON DeviceLink (TCP-Out)	TCP	Any	Any	Any	4206
DeviceLink.exe	OMICRON DeviceLink (UDP-Out)	UDP	Any	Any	Any	69
Any	OMICRON Interprocess Communication (TCP-Out)	TCP	Any	Any	127.0.0.0/8	127.0.0.0/8

Program/service name	Rule name	Protocol type	Local Port	Remote Port	Local IP	Remote IP
Any	OMICRON Interprocess Communication (UDP-Out)	UDP	Any	Any	127.0.0.0/8	127.0.0.0/8
Any	OMICRON Test Set Communication	TCP	Any	2200 -2204	Any	Any
Any	OMICRON Test Set Secure Communication	TCP	Any	4200 -4206	Any	Any

16.3 CPX 200 in a network

With the functionality **Accept**/**Deny**, the *CPX 200* handles external device connections, such as the connection to a computer running *CPXpert*.

By the initial connection request of a new external client, 4 options are available for authentication:

- Accept external access during the connection session.
- Accept external access till it is revoked in the *CPX 200 TouchControl* **Settings**
- Deny external access for the requested connection.
- Deny external access till it is revoked in the *CPX 200 TouchControl* **Settings**.

To connect the *CPX 200* to *CPXpert*, the operational mode of the *CPX 200* needs to be set to **SAFE**. The **SAFE** signal light on the *CPX 200* front panel will be continuously green, and the **ACTIVE** signal light will be off.

Connection to the *CPX 200* can be established only when *TouchControl* is in the **Home** view. It is impossible to connect if any other view is open.

Furthermore, only one external client can be connected to the *CPX 200* at a time. For example, if 2 *CPXpert* instances are running, the *CPX 200* can only connect to one of them. If a second *CPXpert* instance attempts to establish a connection while the first instance is already connected, the connection attempt will be declined.

For a careful handling of external connection requests, you should observe the following points:

- Only accept your own connection requests and avoid unauthorized access.
- The *CPX 200* device owner should document the connected external clients.
- Review allowed external clients in timely intervals, for example every quarter.

17 OMICRON Device Link

OMICRON Device Link is an easy-to-use setup tool that enables you to prepare OMICRON devices for use in testing software. It manages communication between a PC and OMICRON devices. It offers the required computer interface to access and configure all devices connected to your computer via Ethernet, and access to the test files generated by the *CPX 200*.

17.1 OMICRON File Browser

The **OMICRON File Browser** enables access to the internal storage of the *CPX 200*. Within the *CPX 200* storage, test data as well as log files are organized. The **OMICRON File Browser** is designed in a side-by-side view, with the PC storage on the left and the *CPX 200* storage on the right.

Functionality of the OMICRON File Browser

File copy

Copy a file to the device from the PC and vice versa.

- UI Element: **Copy to device**, **Copy to Computer**
- Shortcut key: **Ctrl + S**

Operation is enabled once a file has been selected.

Context menu

The context menu can be accessed by right-clicking on a file.

Create New folder

Create a new folder on the PC or device.

- UI Element: **Context menu** > **New Folder**
- Shortcut key: **Ctrl + N**

Rename

Rename a file or folder on the PC or device.

- UI Element: **Context menu** > **Rename**
- Shortcut key: **F2**

Delete

Delete a file or folder on the PC or device.

- UI Element: **Context menu** > **Delete**
- Shortcut key: **Del**

Navigation to previous location

Navigate to a folder on a higher hierarchy.

- UI Element: img symbol

  Note: You can also select a folder directly by left-clicking an entry in the **Address bar**.
- Shortcut key: **Alt + Up**

Note: User drives are usually organized within `C: Users > [UserName]`.

18 Maintenance

18.1 Cleaning

⚠ WARNING

Death or severe injury caused by high voltage or current possible

- ▶ Do not clean the *CPX 200* while it is connected to a test object.
- ▶ Disconnect the test object, accessories and connection cables before cleaning.

▶ Use a cloth dampened with isopropanol alcohol to clean the *CPX 200* and its accessories.

18.2 Replacing the dust filter

It is recommended to regularly replace the dust filter. The interval depends on how long and how often the *CPX 200* is used in a relatively dirty environment.



Figure 18-1: Removing the magnetic ventilation grid from the *CPX 200*

1. Place the *CPX 200* on its bottom side, ensuring the left ventilation grid is on the left.
2. Unlatch the ventilation grid via the lower middle section.
3. Carefully remove the ventilation grid.

4. Replace or clean the dust filter. Place the new or cleaned dust filter within the ventilation grid.

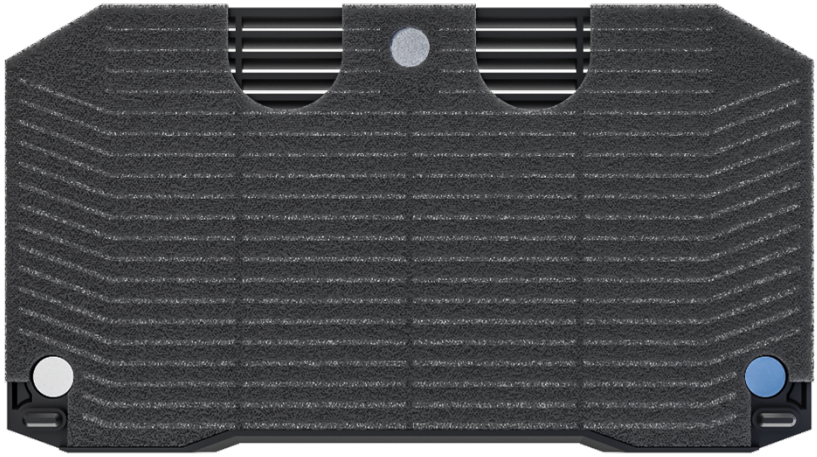

Figure 18-2: Placing the dust filter within the ventilation grid

5. Insert the top part of the ventilation grid. Ensure that the top magnet of the ventilation grid aligns with the top magnet of the *CPX 200*'s left-side panel.
6. Press the lower part of the ventilation grid until it engages with the 2 bottom magnets on the left-side panel of the *CPX 200*.

18.3 Changing fuses for I IN1 and I IN2

The **I IN1** and **I IN 2** current inputs of the *CPX 200* are safeguarded by an additional fuse per input. If these fuses are defective or blown, this causes faulty current input readings. To replace a defective fuse:

1. Ground the test object and disconnect it from the *CPX 200*. This step prevents a potentially faulty test object from feeding power back into the *CPX 200*.
2. Switch off the *CPX 200* and disconnect the power cord.
3. Press the **emergency switching off** button and wait for 10 seconds. This waiting period allows the internal electrolytic capacitors to fully discharge.
4. Locate the blown fuse on the left side panel of the *CPX 200*, behind the magnetic ventilation grid cover of the dust filter.
5. Replace the defective fuse with a 12 A fuse (12 A slow-acting wire fuse 6 × 32 mm rated for 600 V AC/DC) for either **I IN1** or **I IN 2**.

Fuses must only be replaced with a fuse of the exact same type.

18.4 Device self-test

⚠ DANGER

Death or severe injury caused by high voltage or current

The *CPX 200* must not be used if the device self-test fails. Safe device conditions cannot be guaranteed in this state. Return the unit to OMICRON for repair and inspection.

The device self-test is solely intended for the *CPX 200*. A passed self-test does not ensure that *CPX 200* accessory devices, such as the *HVX10*, are in sound condition.

The device self-test performs several internal checks to verify the health of the *CPX 200* system. It is accessible via *TouchControl* in the **Settings** view, within the **General** section.

If one or more tests fail, the *CPX 200* unit must be taken out of service and returned to OMICRON for repair and inspection.

Contact OMICRON Support (→ Support (page 280)) for more information.

19 Open-source license information

Parts of the software are under OMICRON license, other parts are under open-source software licenses.

CPXpert contains the following open-source components:

Open-source component	License type
AsyncIO	MPL-2.0
Autofac	MIT
Autofac.Extensions.DependencyInjection	MIT
boost	BSL-1.0
CommandLineParser	License.md
CommonServiceLocator	MS-PL
DocumentFormat.OpenXml	MIT
DocumentFormat.OpenXml.Framework	MIT
Fluent UI System Icons	MIT
FluentValidation	Apache-2.0
Google.Protobuf	BSD-3-Clause
Grpc.AspNetCore.Server	Apache-2.0
Grpc.Core.Api	Apache-2.0
Grpc.Net.Client	Apache-2.0
Grpc.Net.ClientFactory	Apache-2.0
Grpc.Net.Common	Apache-2.0
libarchive	Libarchive
NaCl.Net	MPL-2.0
NetMQ	LGPL3
Newtonsoft.Json	MIT
NKristek.Wpf.Converters	MIT
NLog	BSD-3-Clause
NLog.Extensions.Logging	BSD-2-Clause
Openssl	OpenSSL/SSleay
protobuf-net	Apache-2.0
protobuf-net.Core	Apache-2.0
protobuf-net.Grpc	Apache-2.0
protobuf-net.Grpc.AspNetCore	Apache-2.0
protobuf-net.Grpc.AspNetCore.Reflection	Apache-2.0
protobuf-net.Grpc.ClientFactory	Apache-2.0
protobuf-net.Grpc.Reflection	Apache-2.0
protobuf-net.Reflection	Apache-2.0
qt	LGPL-2.1
SharpVectors	BSD-3-Clause
xerces-c	Apache-2.0

Open-source component	License type
zlib	Zlib

TouchControl contains the following open-source components:

Open-source component	License type
alsa-lib	LGPL-2.1
alsa-utils	GPL-2.0
boost	BSL-1.0
busybox	GPL-2.0
chilibean	Proprietary
chilibean_webui	Proprietary
chimdisp_splash	Proprietary
chimera	Proprietary
chimera_avahi	LGPL-2.1
chimera_omflite	Proprietary
chimera_powerdown	GPL-2.0
chimera_spi_dev	GPL-2.0
chimera_thermal_monitoring	GPL-3.0
dhcp	MPL-2.0
ecatmaster	Proprietary
eltt2	BSD-3-Clause
ethtool	GPL-2.0
eudev	GPL-2.0
expat	MIT
firmware-imx	LA_OPT_NXP_Software_License-v48
glib	LGPL-2.1
glibc	LGPL-2.1
gstreamer	LGPL-2.0
gvdb	LGPL-2.1
hidapi	BSD-3-Clause
imx-atf	BSD-3-Clause
imx-mkimage	GPL-2.0
iptables	GPL-2.0
libarchive	BSD-3-Clause
libdaemon	LGPL-2.1
libdrm	MIT
libestr	LGPL-2.1
libfastjson	MIT
libffi	MIT
libgtest	BSD-3-Clause
libmpg123	LGPL-2.1

Open-source component	License type
libpcap	BSD-3-Clause
libvncserver	GPL-2.0
libxcrypt	LGPL-2.1
lic	Proprietary
lm-sensors-app	GPL-2.0
lm-sensors-lib	LGPL-2.1
ls1043a_fuse	GPL-2.0
maio	GPL-2.0
mesa	MIT
mtrt_ls1043a_kernel	GPL-2.0
mtrt_ls1043a_uboot	GPL-2.0
mtrt_ls1043a_uboot_sd	GPL-2.0
mtui_smarc_imx8_kernel	GPL2
mtui_smarc_imx8mp_uboot	GPL-2.0
ncurses	MIT
openssh	BSD
openssl	OpenSSL/SSLeay
pcre2	BSD
qoriq-fm-ucode	NXP-Binary-EULA
qt-qpa	LGPL-2.1
rsyslog	GPL-3.0
screen	GPL-3.0
sshpass	GPL-2.0
strace	LGPL-2.1
subscomm	Proprietary
tar	GPL-3.0
wayland	MIT
wayland-protocols	MIT
wt	Commercial
x11vnc	GPL-2.0
xerces-c	Apache-2.0
zlib	Zlib

▶ To access the open-source license information including the necessary source code, go to omicronenergy.com/opensource, select **DOWNLOAD SOFTWARE**, and navigate to the corresponding directory.

20 Technical data

OMICRON recommends that you send in your unit for calibration at least once a year.

20.1 General

This section contains the complete specifications for the *CPX 200*, the optional **High Current Module** as well as the *HVX10*. These specifications characterize the behavior of the devices under different operating conditions. The values stated in this section are one of the following:

- **Guaranteed specifications** are either verified with every test set during production or defined by design. All guaranteed specifications are given with a confidence level of 99 %, k = 2.58, normally distributed when operated under the conditions stated in Specification conditions (page 252).
  To take account of component drift, specified values are valid for 1 year. The period starts on the date of issue stated on the Certificate of Calibration and Conformance.
- **Typical specifications** are determined with an adequate number of test sets during type tests, for typical applications, operated under the conditions stated in Specification conditions (page 252).
  90 % of all devices meet these specifications for 1 year. Typical specifications are not tested during production and are therefore not warranted.

For calculation examples of how to interpret the specifications, see Calculation example (page 253).

Technical data is subject to change without prior notice.

20.1.1 Specification conditions

Unless stated otherwise, the specifications given in this section apply at the terminals of the *CPX 200*, **High Current Module** and the *HVX10* and under the following conditions:

- After a warm-up period of 30 minutes
- At a temperature of 23 °C ± 5 °C
  If the device is operated outside this temperature range, but within the maximum operating conditions stated in Environmental conditions (page 254), a typical temperature coefficient must be added to the guaranteed specifications.
- At a relative humidity of 20 … 80 %
- Maximum altitude of 2 000 m (6 550 ft)
- If regular calibration is performed at least every year

20.1.2 Characteristics of AC measurements

In dedicated tests

All AC measurements are frequency selective. Filters with specific characteristics are used to obtain the amplitude of the test signal in a defined frequency bandwidth. Comparability to wideband true-RMS meters is therefore limited.

In Quick test

RMS or frequency selective measurement mode can be selected. The frequency selective mode is only available with frequencies ≥ 15 Hz.

20.1.3 Phase measurement

Unless otherwise specified, all measurement inputs have a guaranteed phase accuracy of 0.05° at 50/60 Hz.
The typical phase error is 0.017° at 50/60 Hz.

20.1.4 Output time

All stated typical output times are based on using clean dust filters and environmental conditions allowing for adequate air flow.

- ▶ Ensure that the dust filter is in sound condition. (→ Replacing the dust filter (page 246))
- ▶ The optimal output time is given within the frequency range of 45 to 65 Hz.

20.1.5 Calculation example

The accuracy specification for each measurement range is stated in the form

± (% of reading + offset)

- ▶ To obtain the measurement accuracy, multiply the displayed measured value with the stated reading accuracy and add the offset.

Example:

A test signal with a nominal value of 100 V_{DC} is applied to **V IN1** of the *CPX 200* and the measurement accuracy shall be determined.

The device is operated in the 300 V range.

The display shows a measured value of 99 V.

The guaranteed accuracy is specified as 0.045 % of reading + 40 mV and is therefore,

$$99\,V \times \frac{0.045\,\%}{100\,\%} + 40\,mV = 84.6\,mV$$

The measured value can be stated as

$V_{Measured}$ = 99 V ± 0.085 V (k = 2.58)

20.1.5.1 Temperature outside specification condition

When operating the system at ambient temperatures beyond 23 °C ± 5 °C, the temperature coefficient has to be taken into account.

Example (continued):

In addition to the example described above, the device is now operated at 40 °C.
The guaranteed accuracy is: 0.045 % of reading + 40 mV + 0.0015 %/°C of reading + 2.5 mV/°C

$$99\,V \times \frac{0.045\,\%}{100\,\%} + 40\,mV + \Delta T \times \frac{0.0015\,\%}{°C} + \Delta T \times \frac{2.5\,mV}{°C}$$

ΔT = 40 °C – 28 °C = 12 °C

$$99\,V \times \frac{0.045\,\%}{100\,\%} + 40\,mV + 12\,°C \times \frac{0.0015\,\%}{100\,\% \times °C} + 12\,°C \times \frac{2.5\,mV}{°C} = 114.7\,mV$$

$V_{Measured}$ = 99 V ± 0.11 V (k = 2.58)

20.1.6 Environmental conditions

Table 20-1: Environmental conditions for the *CPX 200* and *HVX10*

Characteristic	Specification
Temperature Operating Storage	 -10 °C … +55 °C (+14 °F … +131 °F) -30 °C … +70 °C (-22 °F … +158 °F)
Maximum altitude Operating CAT III, 300 V_{RMS} CAT III, 150 V_{RMS} CAT II, 300 V_{RMS} Storage	 up to 2 000 m (6 550 ft) 2 000 … 5 000 m (6 550 … 16 400 ft) 2 000 … 5 000 m (6 550 … 16 400 ft) up to 12 000 m (40 000 ft)
Humidity	5 % … 95 % relative humidity; no condensation

20.1.7 Standards conformity

Table 20-2: Compliance with electromagnetic compatibility standards for the *CPX 200* and *HVX10*

Electromagnetic compatibility	Standard
International/Europe USA Canada	EN IEC 61326-1 FCC Subpart B of Part 15 Class A CAN ICES-3 (A)/NMB-3(A)

Table 20-3: Compliance with mechanical standards for the *CPX 200* and *HVX10*

Mechanical tests	Standard
Sinusoidal vibration	IEC/EN 60068-2-6 frequency range 10 Hz … 150 Hz, acceleration 2 g continuous (20 m/s² / 65 ft/s²), 20 cycles per axis
Mechanical shock	IEC/EN 60068-2-27 15 g/11 ms, half-sinusoid, 3 shocks in each axis
Degree of protection	IP 21

Table 20-4: Compliance with safety standards for the *CPX 200* and *HVX10*

Safety	Standards
International/Europe	IEC/EN 61010-1, IEC/EN 61010-2-030
USA	UL 61010-1, UL 61010-2-030

Safety	Standards
Canada	CAN/CSA-C22.2 No. 61010-1 CAN/CSA-C22.2 No. 61010-2-030

20.2 CPX 200

20.2.1 Power supply

For more information about the *CPX 200* power supply, see Power supply (page 16).

Table 20-5: Required power supply for using the *CPX 200*

Characteristic	Specification
Connector	C20 according to IEC 60320-1
Nominal voltage single phase*	100 … 240 V_{AC}
Permitted voltage single phase*	85 … 264 V_{AC}
Power consumption	3 500 VA / < 7 000 VA (< 10 s)
Nominal frequency	50/60 Hz
Permitted frequency	45 … 65 Hz
Power fuse	16 A
Overvoltage category	II

* If the power supply voltage is < 190 V_{AC}, the *CPX 200* is not able to provide the full output power.

▶ To gain the full output power, provide a sufficient power supply (190 V … 240 V_{AC}).

20.2.2 OUT A

OUT A is a configurable single-phase AC/DC source, capable of delivering 100 A_{peak} in current mode and 120 V_{peak} in voltage mode.

Table 20-6: General **OUT A** specification

Characteristic	Specification
Maximum output voltage	120 V_{peak}
Maximum output current	100 A_{peak}
Maximum output power	2 500 VA (25 s) 1 280 VA (Continuous) Details on deratings and duty cycle are described in Typical output specifications (page 256).
Output frequency	DC, 1 … 599 Hz
Measurement ranges (RMS value)	Current: 100 mA, 1 A, 10 A, 50 A, 100 A Voltage: 100 V
Protection	Protected against short-circuit, overload, and overtemperature

20.2.2.1 Typical output specifications

Table 20-7: Typical output specifications for **OUT A** current output ranges

Range	Frequency	Maximum ratings	
		V_{max}	Output time @ I_{max}
0 … 8 A	1 ... 599 Hz	85 V	Continuous
0 … 35 A		85 V	480 s
0 … 70 A		42 V	25 s
0 … 12 A	DC	120 V	Continuous
0 … 50 A		120 V	60 s
0 … 100 A		60 V	3 s

Table 20-8: Typical output specifications for **OUT A** voltage output ranges

Range	Frequency	Maximum ratings	
		I_{max}	Output time @ I_{max}
0 … 42 V	1 … 599 Hz	32 A	Continuous
0 … 85 V		16 A	Continuous
0 … 60 V	DC	32 A	600 s
0 … 120 V		20 A	60 s

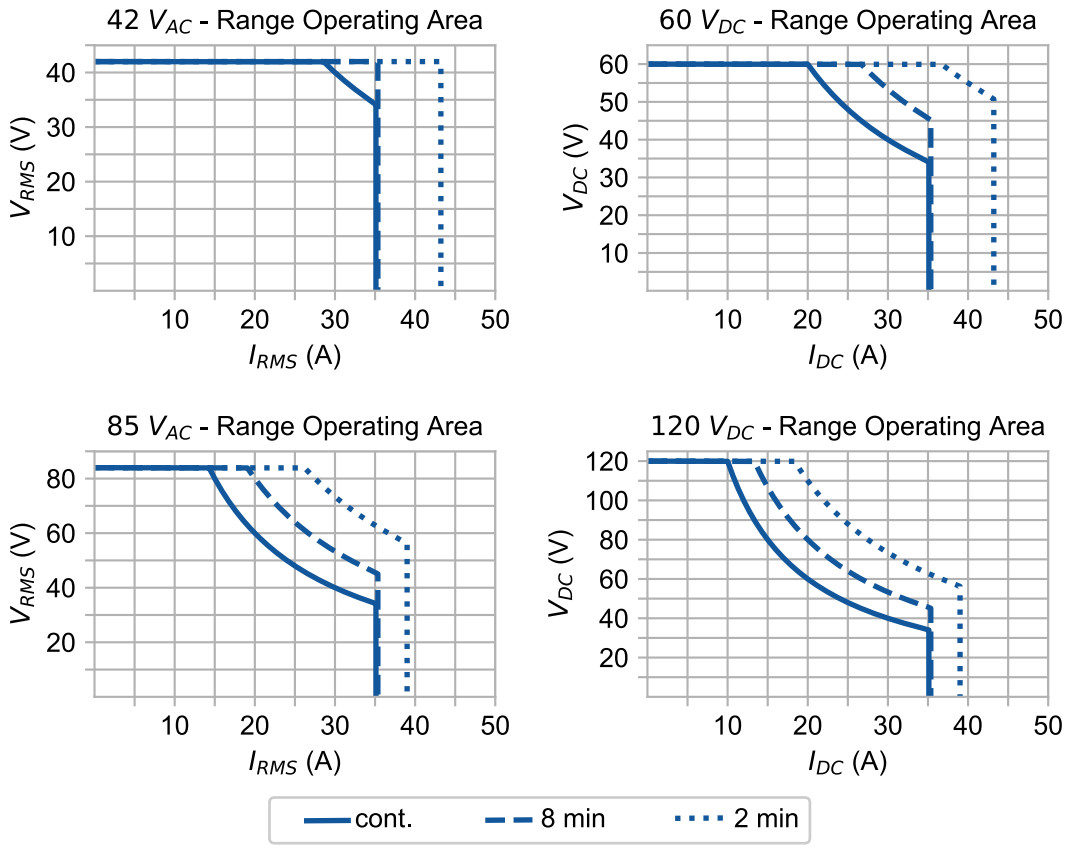

Figure 20-1: Typical **OUT A** output operating times while using different AC (45 … 65 Hz) and DC ranges

20.2.2.2 Guaranteed accuracy

Table 20-9: Guaranteed **OUT A** current measurement specifications

Range	Frequency	Accuracy ± (% of reading + Offset)	Temperature coefficient beyond 23 °C ± 5 °C ± (% of reading + Offset)/°C
100 mA	DC	0.04 % + 50 µA	0.0008 % + 3 µA
	15 … 100 Hz	0.04 % + 20 µA	0.0008 %
1 A	DC	0.05 % + 200 µA	0.0008 % + 3 µA
	15 … 100 Hz	0.05 % + 20 µA	0.0008 %
10 A	DC	0.10 % + 5000 µA	0.0020 % + 200 µA
	15 … 100 Hz	0.10 % + 100 µA	0.0020 %
50 A	DC	0.16 % + 10 000 µA	0.0020 % + 100 µA
	15 … 100 Hz	0.16 % + 300 µA	0.0020 %
100 A	DC	0.24 % + 20 000 µA	0.0020 % + 200 µA
	15 … 100 Hz	0.24 % + 500 µA	0.0020 %

Table 20-10: Guaranteed **OUT A** voltage measurement specifications

Range	Frequency	Accuracy ± (% of reading + offset)	Temperature coefficient beyond 23 °C ± 5 °C ± (% of reading + Offset)/°C	Condition
100 V	DC	0.15 % + 15 mV	0.0035 % + 0.2 mV	Load > 5 kΩ
	15 … 100 Hz	0.15 % + 10 mV	0.0035 %	

20.2.2.3 Typical accuracy

Table 20-11: Typical **OUT A** current measurement specifications

Range	Frequency	Accuracy ± (% of reading + offset)
0 … 1 A	DC	0.02 % + 0.05 mA
	15 … 100 Hz	
1 … 50 A	DC	0.05 % + 2 mA
	15 … 100 Hz	
50 … 100 A	DC	0.1 % + 5 mA
	15 … 100 Hz	

Table 20-12: Typical **OUT A** voltage measurement specifications

Range	Frequency	Accuracy ± (% of reading + offset)	Condition
100 V	DC	0.07 % + 10 mV	Load > 5 kΩ
	15 … 100 Hz	0.07 % + 10 mV	

20.2.3 OUT B

OUT B is a configurable three-phase AC source, capable of delivering 3 × 150 V L-N (260 V L-L) or 1 × 300 V L-N.

Table 20-13: General **OUT B** specification

Characteristic	Specification
Maximum output voltage	300 V_{RMS}
Maximum output current	300 mA_{RMS}
Maximum output power	45 VA
Output frequency	1 … 599 Hz
Measurement ranges (RMS value)	Current: 300 mA Voltage: 300 V
Source Impedance	In three phase mode: < 1.5 Ω
	In one phase to N mode: < 3 Ω
Protection	Protected against short-circuit, overload, and overtemperature

20.2.3.1 Typical output specifications

Table 20-14: Typical **OUT B** output specifications

Mode	Frequency	Maximum ratings			
		Amplitude	Current	Output power	Output time (at Imax)
Current 3 Phase	10 … 65 Hz	3 × 50 V	3 × 300 mA	3 × 15 VA	Continuous
Current 1 Phase	45 … 65 Hz	1 × 150 V	1 × 300 mA	1 × 45 VA	
Voltage 3 Phase	10 … 65 Hz	3 × 150 V	3 × 100 mA	3 × 15 VA	
Voltage 1 Phase	45 … 65 Hz	1 × 300 V	1 × 150 mA	1 × 45 VA	

20.2.3.2 Guaranteed accuracy

Table 20-15: Guaranteed **OUT B** current measurement specifications

Range	Frequency	Accuracy ± (% of reading + offset)	Temperature coefficient beyond 23 °C ± 5 °C ± (% of reading + offset)/°C	Condition
300 mA	DC	0.1 % + 50 µA	0.0015 % + 3 µA	Load < 100 Ω
	15 … 100 Hz	0.1 % + 20 µA	0.0015 %	

Table 20-16: Guaranteed **OUT B** voltage measurement specifications

Range	Frequency	Accuracy ± (% of reading + offset)	Temperature coefficient beyond 23 °C ± 5 °C ± (% of reading + offset)/°C	Condition
300 V	DC	0.15 % + 300 mV	0.0025 % + 15 mV	**3 phase mode:** symmetric load > 5 kΩ **1 phase to N mode:** load > 10 kΩ
	15 … 100 Hz	0.15 % + 20 mV	0.0025 %	

20.2.3.3 Typical accuracy

Table 20-17: Typical **OUT B** current measurement specifications

Range	Frequency	Accuracy ± (% of reading + offset)	Condition
300 mA	DC	0.05 % + 20 µA	Load < 100 Ω
	15 … 100 Hz		

Table 20-18: Typical **OUT B** voltage measurement specifications

Range	Frequency	Accuracy ± (% of reading + offset)	Condition
300 V	DC	0.07 % + 150 mV	3 phase mode: symmetric load > 5 kΩ 1 phase to N mode: load > 10 kΩ
	15 … 100 Hz		

20.2.4 V IN

The 2 voltage inputs **V IN1** and **V IN2** are highly accurate AC/DC measurement channels for signal amplitudes up to 300 V_{RMS}.

Table 20-19: General **V IN1** and **V IN2** voltage input specification

Characteristic	Specification
Measurement ranges (RMS value of the sinusoidal shaped input signal)	70 mV, 700 mV, 7 V, 70 V, 300 V
Typical input impedance	1 MΩ || 100 pF
Maximum input voltage	300 V CAT II
Protection	Protected against overvoltage

20.2.4.1 Guaranteed Accuracy

Table 20-20: Guaranteed **V IN1** and **V IN2** voltage measurement specifications

Range	Frequency	Accuracy ± (% of reading + offset)	Temperature coefficient beyond 23 °C ± 5 °C ± (% of reading + offset)/°C
70 mV	DC	0.055 % + 0.1 mV	0.0015 % + 0.007 mV
	15 … 100 Hz	0.055 % + 0.05 mV	0.0015 %
700 mV	DC	0.045 % + 0.1 mV	0.0015 % + 0.007 mV
	15 … 100 Hz	0.045 % + 0.05 mV	0.0015 %
7 V	DC	0.045 % + 0.5 mV	0.0015 % + 0.035 mV
	15 … 100 Hz	0.045 % + 0.1 mV	0.0015 %
70 V	DC	0.055 % + 40 mV	0.0015 % + 2.5 mV
	15 … 100 Hz	0.055 % + 5 mV	0.0015 %
300 V	DC	0.045 % + 40 mV	0.0015 % + 2.5 mV
	15 … 100 Hz	0.045 % + 10 mV	0.0015 %

20.2.4.2 Typical Accuracy

Table 20-21: Typical **V IN1** and **V IN2** voltage measurement specifications

Range	Frequency	Accuracy ± (% of reading + offset)
0 … 300 V	DC	0.03 % + 0.02 mV
	15 … 100 Hz	

20.2.5 I IN

The 2 current inputs **I IN1** and **I IN2** are highly accurate AC/DC measurement channels for signal amplitudes up to 10 A_{RMS}.

Table 20-22: General **I IN1** and **I IN2** current input specifications

Characteristic	Specification
Measurement ranges (RMS value of the sinusoidal shaped input signal)	1 A, 10 A
Typical input impedance	< 0.1 Ω on terminals
Maximum input current	10 A continuous 12 A fused (changeable) Type: 6 × 32 mm ceramic tube fast-acting
Protection	Protected against transient overvoltage

20.2.5.1 Guaranteed accuracy

Table 20-23: Guaranteed **I IN1** and **I IN2** current measurement specifications

Range	Frequency	Accuracy ± (% of reading + offset)	Temperature coefficient beyond 23 °C ± 5 °C ± (% of reading + offset)/°C
1 A	DC	0.06 % + 400 µA	0.0015 % + 30 µA
	15 … 100 Hz	0.06 % + 50 µA	0.0015 %
10 A	DC	0.08 % + 600 µA	0.0010 % + 40 µA
	15 … 100 Hz	0.08 % + 200 µA	0.0015 %

20.2.5.2 Typical accuracy

Table 20-24: Typical **I IN1** and **I IN2** current measurement specifications

Range	Frequency	Accuracy ± (% of reading + offset)
0 … 10 A	DC	0.04 % + 200 µA
	15 … 100 Hz	

20.2.6 BIN OUT

The 2 binary output channels **BIN OUT1** and **BIN OUT2** are programmable switches with AC/DC measurement capabilities (up to 300 V_{RMS} in open config, up to 15 A_{RMS} in closed configuration).

Table 20-25: General **BIN OUT1** and **BIN OUT2** specifications

Characteristic	Specification	Condition
Maximum input voltage	300 V	
Maximum input current	3 A 15 A	Continuous T ≤ 3 s
Measurement ranges (RMS value of the sinusoidal shaped input signal)	300 V, 15 A	
Resolution	25 µs	
On voltage	< 3.5 V_{peak}	15 A input current
Protection	Protected against overcurrent, 10 A fused	

20.2.6.1 Guaranteed accuracy

Table 20-26: Guaranteed **BIN OUT1** and **BIN OUT2** current measurement specifications

Range	Frequency	Accuracy ± (% of reading + offset)	Temperature coefficient beyond 23 °C ± 5 °C ± (% of reading + offset)/°C
15 A	DC	0.5 % + 10 mA	0.0010 % + 0.02 mA
	15 … 100 Hz	0.5 % + 10 mA	0.0010 %

Table 20-27: Guaranteed **BIN OUT1** and **BIN OUT2** voltage measurement specifications

Range	Frequency	Accuracy ± (% of reading + offset)	Temperature coefficient beyond 23 °C ± 5 °C ± (% of reading + offset)/°C
300 V	DC	1 % + 2000 mV	0.01 % + 50 mV
	15 … 100 Hz	1 % + 200 mV	0.01 %

20.2.6.2 Typical accuracy

Table 20-28: Typical **BIN OUT1** and **BIN OUT2** current measurement specifications

Range	Frequency	Accuracy ± (% of reading + offset)
15 A	DC	0.25 % + 3 mA
	15 … 100 Hz	

Table 20-29: Typical **BIN OUT1** and **BIN OUT2** voltage measurement specifications

Range	Frequency	Accuracy ± (% of reading + offset)
300 V	DC	0.5 % + 1000 mV
	15 … 100 Hz	

20.2.7 BIN IN

The 3 binary input channels **BIN IN1**, **BIN IN2** and **BIN IN3** are AC/DC voltage measurement channels for signal amplitudes up to 300 V_{RMS}, with a selectable 1 mA current source. **BIN IN1** has the additional functionality of a programmable switch, like **BIN OUT1** and **BIN OUT2**.

Table 20-30: General **BIN IN1**, **BIN IN2** and **BIN IN3** specifications

Characteristic	Specification
Time resolution	100 µs
Max. measuring time	Unlimited
Deglitch time	0 … 500 ms
Debounce time	0 … 500 ms
Counting function	f ≤ 3 kHz, pulse width > 150 µs

20.2.7.1 Binary input mode (contact configuration: wet)

In the binary input mode for wet contacts (connected to a potential), the state of the connected contact is sensed by the voltage measurement on the channel.

Characteristic	Specification
Modes	AC or DC sensing
Trigger criteria	Logical 0: input voltage > threshold Logical 1: input voltage < threshold
Threshold range	up to ± 300 V_{RMS}
Input impedance	1.1 MΩ || < 1000 pF

20.2.7.2 Binary input mode (contact configuration: dry)

In the binary input mode for dry (potential-free) contacts, a small voltage is applied to the channel to sense the state of the connected contact. The threshold and range are set automatically.

Characteristic	Specification
Trigger criteria	Logical 0: R > 80 kΩ Logical 1: R < 20 kΩ
Input impedance	25 kΩ
Typical source short-circuit current	1 mA
Typical source open loop voltage	23 V

20.2.7.3 Analog input mode

In the analog input mode, the binary input is used as AC/DC measurement channels for signal amplitudes up to 300 V_{RMS}.

Characteristic	Specification
Measurement ranges (RMS value of the sinusoidal shaped input signal)	3 V, 30 V, 300 V
Typical input impedance	1.1 MΩ || < 1000 pF
V Max	300 V
Typical reaction time	< 1 ms
Resolution	25 µs

20.2.7.4 Guaranteed accuracy

Table 20-31: Guaranteed **BIN IN1**, **BIN IN2** and **BIN IN3** voltage measurement specifications

Range	Frequency	Accuracy ± (% of reading + offset)	Temperature coefficient beyond 23 °C ± 5 °C ± (% of reading + offset)/°C
3 V	DC	0.1 % + 5 mV	0.0015 % + 0.15 mV
	15 … 100 Hz	0.1 % + 5 mV	0.0015 %
30 V	DC	0.1 % + 30 mV	0.0015 % + 1.5 mV
	15 … 100 Hz	0.1 % + 10 mV	0.0015 %
300 V	DC	0.1 % + 300 mV	0.0015 % + 15 mV
	15 … 100 Hz	0.1 % + 100 mV	0.0015 %

20.2.7.5 Typical accuracy

Table 20-32: Typical **BIN IN1**, **BIN IN2** and **BIN IN3** voltage measurement specifications

Range	Frequency	Accuracy ± (% of reading + offset)
0 … 300 V	DC	0.05 % + 2 mV
	15 … 100 Hz	

20.2.8 Booster output

The booster output must only be utilized in conjunction with supported OMICRON devices like the *HVX10*. The accuracy specifications are determined by the devices connected to this output.

Table 20-33: *CPX 200* booster output specifications

Booster output	Specification
Output power	2 500 VA (25 s)
Output voltage	85 V_{AC} max.
Output current	35 A_{AC} max.
Frequency range	1 Hz … 5 kHz

20.2.9 Communication interfaces

20.2.9.1 Ethernet port

Table 20-34: *CPX 200* Ethernet port specifications

NETWORK	Specification
Connector	RJ-45
Link speed	10/100/1 000 Mbit/s
Power over Ethernet (PoE)	IEEE 802.3af (13 W max.) IEEE 802.3at (25.5 W max.)
Cable	CAT 5e STP (Shielded Twisted Pair) or better
Quantity	1

20.2.9.2 EtherCAT® ports

All **EtherCAT**® ports and the **SAFETY LINK** interface share the same power supply and are limited by a common budget of 90 W. The 3 **EtherCAT**® ports have priority over the **SAFETY LINK** ports.

Table 20-35: *CPX 200* **EtherCAT**® ports specifications

EtherCAT®	Specification
Connector	RJ-45
Link speed	100 Mbit/s
Power over Ethernet (PoE)	IEEE 802.3af (13 W max.) IEEE 802.3at (25.5 W max.)
Sampling Rate	100 MHz
Quantity	3

20.2.9.3 USB ports

Table 20-36: *CPX 200* USB type A ports specifications

USB Type A	Specification
Connector	USB type A
Version	USB 3.0
Transmission speed	5 Gbit/s
Output current	900 mA
Output voltage	5 V_{DC}
Cable	USB 3.0 high speed or better
Compatible file systems	FAT, ext4
Quantity	2

This interface will allow the use of external communication adapters in the future. Do not connect any accessories or adapters yet.

Table 20-37: *CPX 200* USB type B port specifications

USB Type B	Specification
Connector	USB type B
Version	USB 3.0
Transmission speed	5 Gbit/s
Cable	USB 3.0 high speed or better
Quantity	1

20.2.9.4 IEC 61850 SFP ports

This interface will allow the use of external communication adapters in the future. Do not connect any accessories or adapters yet.

Table 20-38: *CPX 200* IEC 61850 SFP ports specifications

Characteristic	Specification
Transmission speed	1000 Mbit/s
Supported connector types	SFP
Quantity	2

20.2.9.5 SAFETY LINK port

Table 20-39: *CPX 200* **SAFETY LINK** port specifications

Characteristic	Specification
Output voltage	24 V_{DC}

20.2.10 Touchscreen

Table 20-40: *CPX 200* Touchscreen specifications

Characteristic	Specification
Resolution	1280 × 720 pixel (WXGA)
Size	9"
Multitouch	Supported
Brightness	800 nits
Type	LCD

20.2.11 Electrical insulation groups

The *CPX 200* is a protection class I equipment, with insulation designed for pollution degree 2. The inputs and outputs of the *CPX 200* are insulated against protective ground and each other.

Compliance notice for EN 50678 and EN 50699: Impedance between power supply input and protective ground is greater than 400 kΩ.

20.2.12 Mechanical data

Table 20-41: *CPX 200* mechanical data specifications

Characteristic		Specification
Dimensions (W × H × D)	Without handles	465 × 175 × 228 mm (18.3 × 6.9 × 9.0 in)
	With handles	570 × 210 × 228 mm (22.4 × 8.3 × 9.0 in)
Weight	Without **High Current Module**	10.6 kg (23.3 lb)
	With **High Current Module**	13.9 kg (30.7 lb)
Degree of protection		IP 21

20.3 High Current Module

20.3.1 HC OUT (1000 A)

HC OUT (1000 A) is a configurable one-phase AC/DC current source for applications on non-inductive-loads (not usable for Winding Resistance measurements).

Table 20-42: General **HC OUT (1000 A)** output specification

Characteristic	Specification
Maximum output current	1 000 $A_{RMS\ and\ DC}$
Maximum compliance voltage	14 V_{peak}
Maximum output power	5 000 VA at 1 000 A (30 s) 2 500 VA at 300 A (Continuous) Details on deratings are described in Typical output specifications (page 256).
Output frequency	DC, 1 … 599 Hz
Measurement ranges (RMS value)	1 000 A
DC current ripple	0.01 %
Protection	Protected against short-circuit, overload, overvoltage, and overtemperature

20.3.1.1 Typical output specifications

Table 20-43: Typical **HC OUT (1000 A)** maximum output ratings

Frequency	Maximum Ratings			
	Output current	Compliance voltage	Output power	Injection time
DC	1 000 A	4.0 V	4 000 W	30 s
	600 A	5.0 V	3 000 W	180 s
	300 A	8.3 V	2 500 W	Continuous
45 … 65 Hz	1000 A	5.0 V	5 000 VA	30 s
	600 A	6.7 V	4 000 VA	180 s
	300 A	6.7 V	2 000 VA	Continuous

Condition: Power supply socket voltage at operating power > 190 V.

Table 20-44: Typical **HC OUT (1000 A)** output specifications with different setups

Output current (AC/DC)	Injection time	Power supply voltage*	Test leads
1000 A	30 s	≥ 110 V	
1000 A	15 s	> 90 V	
800 A	1 min	> 90 V	
600 A	3 min	> 90 V	
300 A	Cont.	> 90 V	
1000 A	30 s	> 190 V	
800 A	15 s	> 110 V	
700 A	15 s	> 90 V	
600 A	3 min	> 90 V	
300 A	Cont.	> 90 V	
1000 A	10 s	≥ 230 V	
800 A	30 s	> 190 V	
600 A	30 s	> 110 V	
600 A	10 s	> 90 V	
300 A	Cont.	> 90 V	

* Power supply socket voltage at operating power

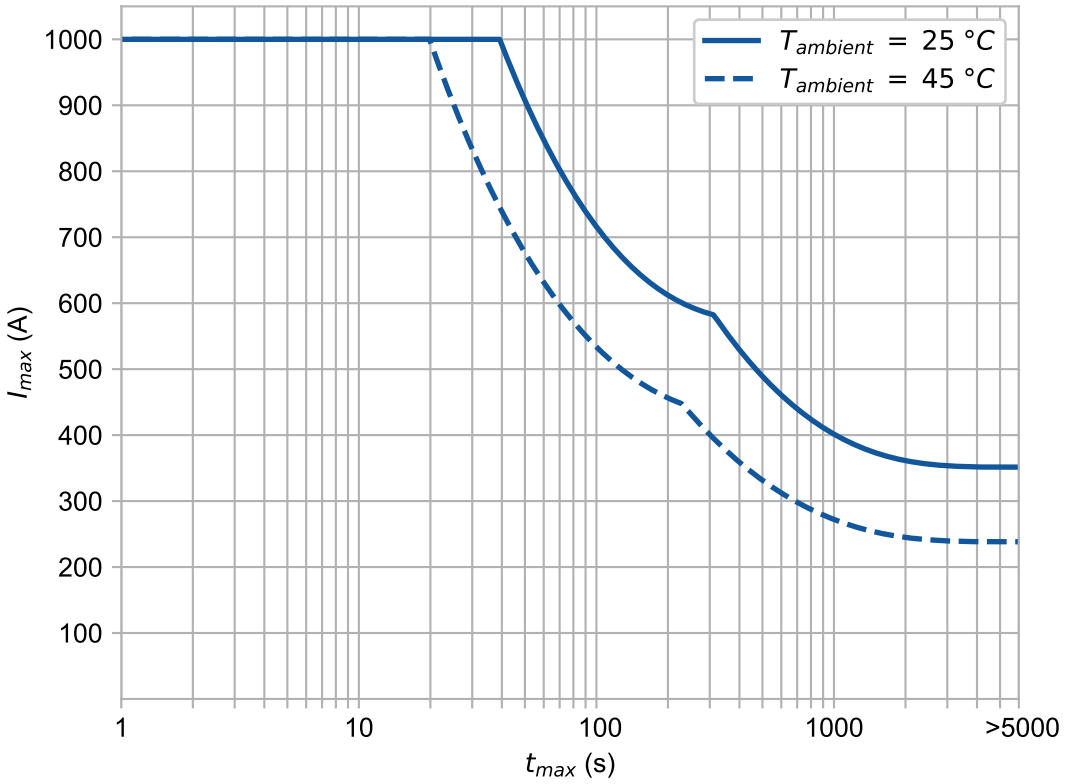

Figure 20-2: Maximum **HC OUT (1000 A)** output time

20.3.1.2 Guaranteed accuracy

Table 20-45: Guaranteed **HC OUT (1000 A)** output current measurement specifications

Range	Frequency	Accuracy ± (% of reading + offset)	Temperature coefficient beyond 23 °C ± 5 °C ± (% of reading + offset)/ °C	Phase accuracy
1 000 A	DC	0.10 % + 1 000 mA	0.0010 % + 30 mA	0.1°
	15 … 100 Hz	0.10 % + 200 mA	0.0010 %	

20.3.1.3 Typical accuracy

Table 20-46: Typical **HC OUT (1000 A)** output current measurement specifications

Range	Frequency	Accuracy ± (% of reading + offset)	Phase accuracy
1 000 A	DC	0.04 % + 400 mA	0.05°
	15 … 100 Hz		

20.3.2 HC OUT (100 A)

Table 20-47: General **HC OUT (100 A)** output specification

Characteristic	Specification
Maximum output current	100 A_{DC}
Maximum compliance voltage	14 V_{peak}
Maximum output power	1 200 VA (Continuous)
Measurement ranges	100 A
DC current ripple	0.1 %
Protection	Protected against short-circuit, overload, and overtemperature

20.3.2.1 Typical output specifications

Table 20-48: Typical **HC OUT (100 A)** output specifications

Frequency	Maximum Ratings			
	Output current	Compliance voltage	Output power	Output time
DC	100 A	12 V	1 200 W	Continuous

20.3.2.2 Guaranteed accuracy

Table 20-49: Guaranteed **HC OUT (100 A)** output current measurement specifications

Range	Frequency	Accuracy ± (% of reading + offset)	Temperature coefficient beyond 23 °C ± 5 °C ± (% of reading + offset)/°C
100 A	DC	0.05 % + 150 mA	0.0010 % + 10 mA
	15 … 100 Hz	0.05 %	0.0010 %

20.3.2.3 Typical accuracy

Table 20-50: Typical **HC OUT (100 A)** output current measurement specifications

Range	Frequency	Accuracy ± (% of reading + offset)
100 A	DC	0.02 % + 60 mA

20.4 HVX10

20.4.1 HV OUT

HV OUT is a single-phase AC/DC voltage source, capable of delivering 10 kV_{RMS} in the frequency range 45 … 120 Hz and reduced amplitude outside this frequency range.

Table 20-51: General HV OUT specifications

Characteristic	Specification	Condition
Maximum output voltage	10 kV	45 … 120 Hz
	4 kV	20 … 600 Hz
	2 kV	10 … 600 Hz
	200 V	1 … 600 Hz
	10 kV	DC
Maximum output current	200 mA	45 … 65 Hz; t ≤ 30 s
	150 mA	45 … 65 Hz; t ≤ 15 min
	100 mA	45 … 65 Hz; continuous
	3 mA	DC; continuous
Ripple in DC Mode	< 3 %	
Measurement ranges (RMS value)	10 kV	
Protection	Protected against short circuit, overload, and overtemperature	

20.4.1.1 Guaranteed accuracy

Table 20-52: Guaranteed **HV OUT** voltage measurement specifications

Range	Frequency	Accuracy ± (% of reading + offset)	Temperature coefficient beyond 23 °C ± 5 °C ± (% of reading + offset)/°C	Condition	Phase accuracy
10 kV	DC	0.3 % + 0.5 V	0.003 % + 0.01 V	Amplitude ≥ 500 V_{DC}	
	15 … 100 Hz		0.003 % + 0.01 V	Amplitude ≥ 200 V	0.5°

Depending on the set output frequency, the *HVX10* can provide the following maximum test voltages:

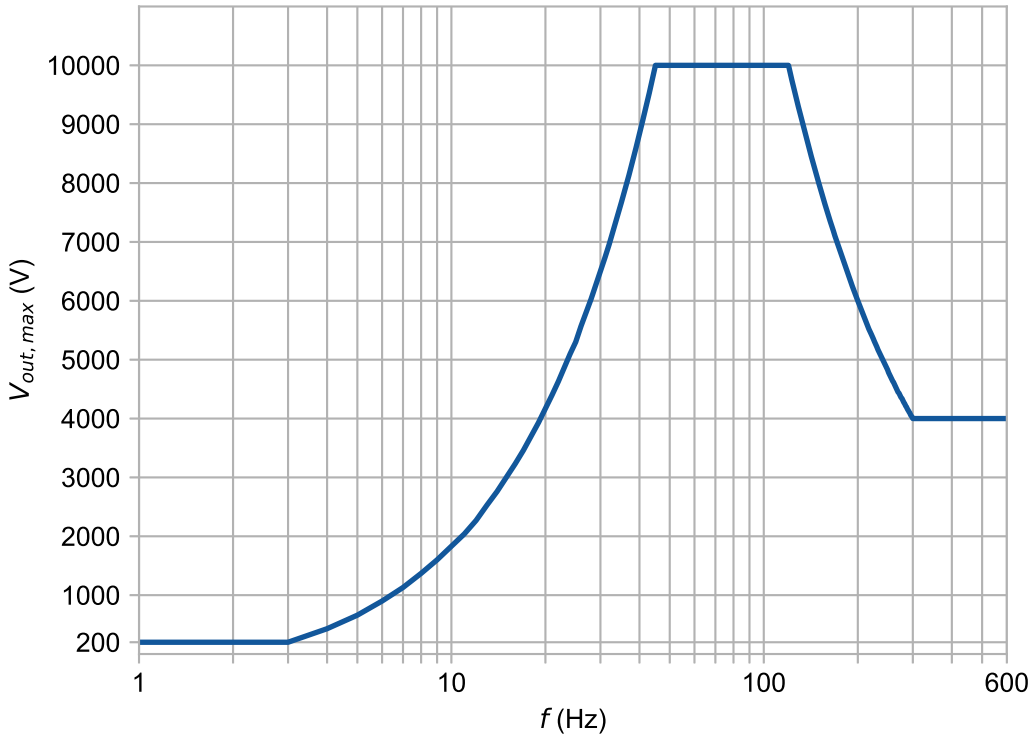

Figure 20-3: Maximum **HV OUT AC** test voltage in dependence of the set output frequency

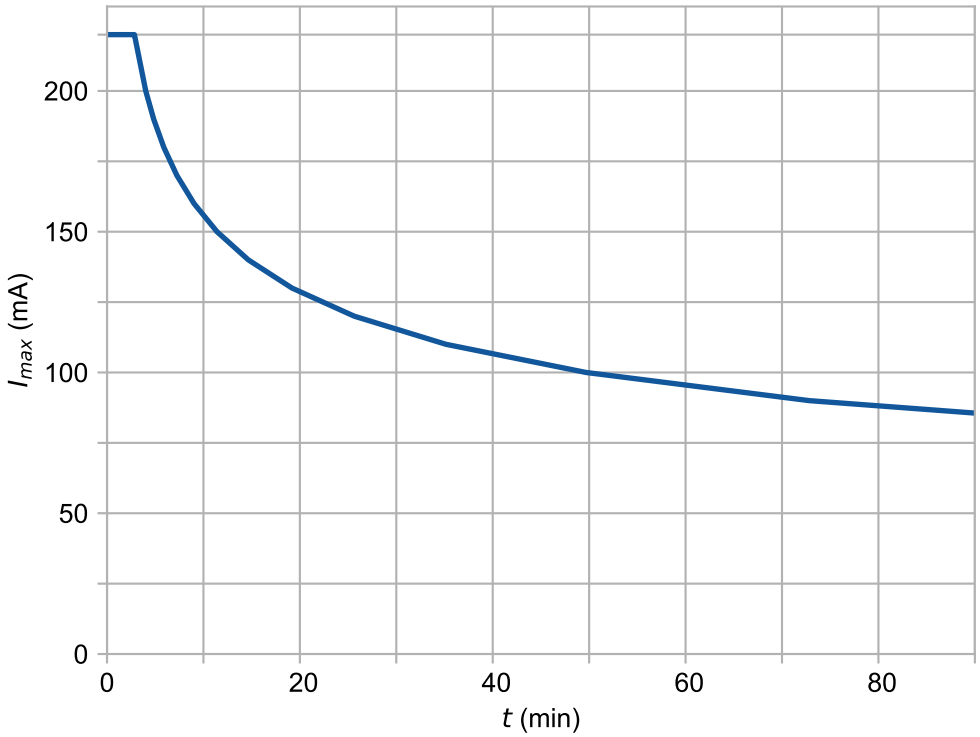

Figure 20-4: Maximum **HV OUT** duration relative to output current

20.4.1.2 Typical accuracy

Table 20-53: Typical **HV OUT** voltage measurement specifications

Range	Frequency	Accuracy ± (% of reading + offset)	Condition	Phase accuracy
10 kV	DC	0.15 % + 0.25 V	Amplitude ≥ 500 V_{DC}	
	15 … 100 Hz		Amplitude ≥ 200 V	0.17°

20.4.2 V IN

The specifications of **V IN** on the *HVX10* device are identical to the specification of the *CPX 200* voltage inputs **V IN** (→ V IN (page 261)).

20.4.3 I IN

The current input **I IN** is a highly accurate AC/DC measurement channels for signal amplitudes up to 225 mA_{RMS}.

Table 20-54: General *HVX10* **I IN** specifications

Characteristic	Specification
Measurement ranges (RMS value of the sinusoidal shaped input signal)	75 µA, 375 µA, 1.5 mA, 7.5 mA, 45 mA, 225 mA

Characteristic	Specification
Measurement inputs	5 physical inputs, switchable to one measurement channel
Typical input impedance	< 1.5 Ω
I IN Max	Limited to the *HVX10* maximum burst output current of 225 mA_{RMS}

20.4.3.1 Guaranteed accuracy

Table 20-55: Guaranteed *HVX10* **I IN** current measurement specifications

Range	Frequency	Accuracy ± (% of reading + offset)	Temperature coefficient beyond 23 °C ± 5 °C ± (% of reading + offset)/°C
75 µA	DC	0.12 % + 0.02 µA	0.0015 % + 0.0005 µA
	15 … 100 Hz	0.12 % + 0.002 µA	0.0015 %
375 µA	DC	0.12 % + 0.02 µA	0.0020 % + 0.001 µA
	15 … 100 Hz	0.12 % + 0.01 µA	0.0020 %
1.5 mA	DC	0.12 % + 0.2 µA	0.0020 % + 0.01 µA
	15 … 100 Hz	0.12 % + 0.05 µA	0.0020 %
7.5 mA	DC	0.12 % + 0.3 µA	0.0020 % + 0.02 µA
	15 … 100 Hz	0.12 % + 0.2 µA	0.0020 %
45 mA	15 … 100 Hz	0.12 % + 2 µA	0.0025 %
225 mA	15 … 100 Hz	0.15 % + 10 µA	0.0025 %

20.4.3.2 Typical accuracy

Table 20-56: Typical *HVX10* **I IN** current measurement specifications

Range	Frequency	Accuracy ± (% of reading + offset)
0 … 225 mA	DC	0.08 % + 0.010 µA
	15 … 100 Hz	

20.4.4 Mechanical data

Table 20-57: *HVX 10* mechanical data

Characteristic	Specification
Dimension (W × H × D)	455 × 170 × 229 mm (17.9 × 6.7 × 9.0 in)
Weight	14.8 kg (32.7 lb)
Degree of protection	IP 21

20.5 Combined specifications

Combined specifications are valid when the *CPX 200* is operated with a dedicated test card.

20.5.1 Current transformer ratio

Table 20-58: Typical current transformer ratio accuracy specifications while using **OUT A** AC and **I IN1**

Nominal ratio	Testing current	Typical accuracy at 50/60 Hz	
		Ratio	Phase
3:1 … 10:1	50 A	0.09 %	0.05° / 3'
10:1 … 100:1	50 A	0.09 %	0.05° / 3'
100:1 … 1 000:1	50 A	0.06 %	0.05° / 3'
1 000:1 … 3 000:1	50 A	0.07 %	0.08° / 5'

Table 20-59: **High Current Module HC OUT 1000 A** output and **I IN1**

Nominal ratio	Testing current	Typical accuracy at 50/60 Hz	
		Ratio	Phase
100:1 … 1 000:1	1 000 A	0.08 %	0.10° / 5'
1 000:1 … 10 000:1	1 000 A	0.08 %	0.20° / 12'
10 000:1 … 30 000:1	1 000 A	0.09 %	0.45° / 25'

20.5.2 Voltage transformer ratio

Table 20-60: Typical power- & voltage transformer ratio accuracy specifications while using **OUT B** and **V IN1**

Nominal ratio	Testing voltage	Typical accuracy at 50/60 Hz	
		Ratio	Phase
1:1 … 10:1	300 V	0.05 %	0.05° / 3'
10:1 … 100:1	300 V	0.05 %	0.05° / 3'
100:1 … 1000:1	300 V	0.05 %	0.05° / 3'
1000:1 … 10000:1	300 V	0.08 %	0.10° / 5'

Table 20-61: Typical voltage transformer ratio accuracy specifications while using *HVX10* **HV OUT** and *HVX10* **V IN**

Nominal ratio	Testing voltage	Typical accuracy at 50/60 Hz	
		Ratio	Phase
3:1 … 10:1	900 V	0.09 %	0.05° / 3'
10:1 … 100:1	3 000 V	0.09 %	0.05° / 3'
100:1 … 1000:1	10 000 V	0.09 %	0.05° / 3'
1000:1 … 10000:1	10 000 V	0.09 %	0.10° / 5'

20.5.3 Transformer turns ratio

Table 20-62: Typical power transformer ratio accuracy specifications while using **OUT B** AC and **BIN IN**

Nominal ratio	Testing voltage	Typical accuracy at 50/60 Hz		Condition
		Ratio	Phase	
1:1 … 10:1	3 × 150 V	0.12 %	0.05° / 3'	Symmetry load > 10 kΩ
10:1 … 100:1	3 × 150 V	0.12 %	0.1° / 5'	

20.5.4 Resistance

Table 20-63: Typical resistance accuracy specifications while using **OUT A** DC output modes and **V IN1**

Nominal resistance	Testing value	Typical accuracy
1 000 Ω … 10 000 Ω	0.005 A	0.05 %
100 Ω … 1 000 Ω	0.02 A	0.05 %
10 Ω … 100 Ω	0.1 A	0.05 %
1 Ω … 10 Ω	0.3 A	0.05 %
0.1 Ω … 1 Ω	2 A	0.08 %
0.01 Ω … 0.1 Ω	5 A	0.08 %
0.001 Ω … 0.01 Ω	32 A	0.08 %
0.0001 Ω … 0.001 Ω	32 A	0.08 %
0.00001 Ω … 0.02 Ω	50 A	0.08 %
0.00001 Ω … 0.02 Ω	100 A	0.13 %

Table 20-64: Typical resistance accuracy specifications while using **HC Out (100 A)** output and **V IN1**

Nominal resistance	Testing current	Typical accuracy
100 µΩ … 20 mΩ	100 A	0.05 %
20 µΩ … 20 mΩ	50 A	0.05 %

Table 20-65: Typical resistance accuracy specifications while using **HC Out (1000 A)** output and **V IN1**

Nominal resistance	Testing current	Typical accuracy
10 µΩ … 1 000 µΩ	600 A	0.07 %
1 µΩ … 100 µΩ	1 000 A	0.07 %

20.5.5 Insulation resistance

Table 20-66: Typical *HVX10* **HV OUT** DC output specifications

Characteristic	Specification	Condition
Maximum test current DC	3 mA	
Capacitance charge time (95 % settling)	< 5 s	Max Capacitance: 5 µF
Capacitance discharge time (< 50 V)	< 200 ms	
Measuring range	Up to 10 TΩ	

Table 20-67: Typical insulation resistance accuracy specifications while using *HVX10* HV OUT with different testing voltages over various resistance ranges

Testing voltage	Nominal resistance	Typical accuracy
10 kV	700 GΩ … < 2.5 TΩ	20 %
	100 GΩ … < 700 GΩ	5 %
	10 MΩ … < 100 GΩ	1 %
5 kV	350 GΩ … < 1.2 TΩ	20 %
	50 GΩ … < 350 GΩ	5 %
	5 MΩ … < 50 GΩ	1 %
2.5 kV	170 GΩ … < 600 GΩ	20 %
	25 GΩ … < 170 GΩ	5 %
	2.5 MΩ … < 25 GΩ	1 %
1.0 kV	70 GΩ … < 250 GΩ	20 %
	10 GΩ … < 70 GΩ	5 %
	1 MΩ … < 10 GΩ	1 %
500 V	35 GΩ … < 125 GΩ	20 %
	5 GΩ … < 35 GΩ	5 %
	250 kΩ … < 5 GΩ	1 %

20.5.6 Capacitance and Dissipation-/Power factor

20.5.6.1 Capacitance Cp (equivalent parallel circuit)

Typical accuracy

Table 20-68: Typical capacitance measurement specifications

Range	Mode	Frequency	Accuracy ± (% of reading + off-set)	Condition
1 pF … 5 µF	UST	1 Hz … 600 Hz	0.15 % + 0.1 pF	I > 3 µA
	GST		0.20 % + 10 pF	I > 10 µA

20.5.6.2 Dissipation Factor DF (tan δ)

Typical accuracy

Table 20-69: Typical dissipation factor measurement specifications

Range	Mode	Frequency	Accuracy ± (% of reading + offset)	Condition
0 … 10 %	UST	50/60 Hz	0.1 % + 0.005 %	I > 10 µA
	GST	50/60 Hz	0.2 % + 0.005 %	I > 50 µA

20.5.6.3 Power Factor PF (cos φ)

Typical accuracy

Table 20-70: Typical power factor measurement specifications

Range	Mode	Frequency	Accuracy ± (% of reading + offset	Condition
0 … 10 %	UST	50/60 Hz	0.1 % + 0.005 %	I > 10 µA
	GST	50/60 Hz	0.2 % + 0.005 %	I > 50 µA

Support

When you are working with our products, we want to provide you with the greatest possible benefits. If you need any support, we are here to assist you.



OMICRON Support – get in touch

omicronenergy.com/support

At our support hotline, you can reach well-educated technicians for all of your questions.

Make use of our 24/7 hotlines:

Americas: +1 713 830-4660 or +1 800-OMICRON

Asia-Pacific: +852 3767 5500

Europe / Middle East / Africa: +43 59495 4444

Additionally, you can find the service center or sales partner closest to you at omicronenergy.com.



OMICRON Customer Portal – stay informed

my.omicronenergy.com

Browse through the knowledge library and find manuals, application notes, conference papers, and much more.

Download the latest software updates and learn about upcoming events.



OMICRON Academy – learn more

omicronenergy.com/academy

Learn more about your product in one of the training courses offered by the OMICRON Academy.

UK importer:
OMICRON electronics UK Limited
Staples Close
Redhill Business Park
Stafford
ST16 1WQ
United Kingdom

Manufacturer:
OMICRON electronics GmbH
Oberes Ried 1
6833 Klaus
Austria

ENU 1246 05 02